BALTIMORE
AIRCOIL COMPANY

DFCV-AD-EC Adiabatic Cooler

RIGGING AND INSTALLATION INSTRUCTIONS

About rigging and installation

The BAC equipment should be rigged and installed as outlined in this bulletin.
These procedures should be thoroughly reviewed prior to the rigging and operation to acquaint all personnel with the procedures to be followed and to assure that all necessary equipment will be available at the job site.
Be sure to have a copy of the unit certified drawing available for reference. If you do not have a copy of this drawing or if you need additional information about this unit, contact the local BAC Balticare representative. His name and phone number can be found on the www.BaltimoreAircoil.eu. The model type and serial number of your equipment are indicated on the unit nameplate.

Recommended maintenance and monitoring programme

Checks and adjustments	Start-Up	Every month	Every 3 months	Every 6 months	Every start of adiabatic season, Spring
Adiabatic pre-cooler water flow	X		X		X
Adiabatic controller set-point	X		X		X
Tighten electrical connections	X			X	X
Rotation of fan(s)	X				
Motor voltage and current	X			X	X
Unusual noise and/or vibration	X		X		X

Inspections and monitoring	Start-up	Every month	Every 3 months	Every 6 months	Every start of adiabatic season, Spring
General condition of the equipment	X		X		X
Adiabatic pre-cooling pads	X		X		X
Heat transfer coil	X			X	
Water distribution pipe	X			X	X
City water strainer	X	X			X
Check each fan for damage to blades & housing				X	
Check the insulation of fan wires for damage				X	
Tightness of fan screwed cable glands				X	
Condensate discharge holes for clogging				X	

Cleaning procedures	Start-up	Every month	Every 3 months	Every 6 months	Every start of adiabatic season, Spring
Adiabatic pre-cooling media	X		X		X
Adiabatic gutter system				X	X

Auxiliary equipment integrated in the cooling system may require additions to the table above. Contact suppliers for recommended actions and their required frequency.

Table of contents

RIGGING AND INSTALLATION INSTRUCTIONS

1	**General information**	**4**
	About engineering and application practices	4
	Shipping	4
	Inspection before rigging	4
	Unit weights	5
	Anchoring	5
	Leveling	5
	Connecting pipework	5
	Purge requirements	5
	Freeze protection	6
	Safety precautions	6
	Non-walking surfaces	7
	Modifications by others	7
	Warranty	7
2	**Rigging**	**8**
	General notes	8
	Rigging method	9
3	**Section Assembly**	**11**
	Installation adiabatic pre-cooler	11
	Installation of screw-on flanges	18
4	**Optional Accessories Assembly**	**19**
5	**Inspection Prior to Start-up**	**20**
	Start-up and Commissioning	20
	Electrical Panel	20
	TrilliumSeries Coolers with factory installed control panel with Variable Frequency Drive	24
6	**Further Assistance & Information**	**29**
	Balticare	29
	More information	29

1 DFCV-AD-EC
GENERAL INFORMATION

About engineering and application practices

This bulletin only refers to the assembly of the unit. To ensure a proper operation, a correct integration of the unit in the overall installation is mandatory. For good engineering and application practices on layout, levelling, connecting pipework, etc., please refer to our website:
http://www.baltimoreaircoil.eu/knowledge-center/application-information.

Shipping

BAC cooling equipment is factory assembled to assure uniform quality and minimum field assembly.
The adiabatic pre-cooler sections of the TrilliumSeries equipment are shipped separately. Refer to below table for number of adiabatic pre-cooler sections per model.

Model	Number of fans	Number of adiabatic pre-cooler sections
DFCV EC9122-*	4	2
DFCV EC9123-*	6	2
DFCV EC9124-*	8	4
DFCV EC9125-*	10	4
DFCV EC9126-*	12	4
DFCV EC9127-*	14	4

Number of fans and pre-cooler sections per model

Inspection before rigging

When the unit is delivered to the job site, it should be checked thoroughly to ensure all required items have been received and are free of any shipping damage prior to signing the bill of lading.
The following parts should be inspected:

- Exterior panels and covers
- Fans
- Heat exchanger
- Adiabatic pre-cooler sections
- Electrical panels
- Fluid temperature sensor

Pre-cooler sections are shipped loose and packed separately in a wooden crate. Gasket for assembly is already applied on these sections. SST bolts and nuts are packed in a small cardboard box and stored inside the wooden crate of the pre-cooler sections.

Unit weights

Before rigging any BAC equipment, the weight of each section should be verified on the unit certified drawing.

These weights are **approximate** and should be confirmed by weighing **before lifting** when available hoisting capacity provides little margin for safety.

CAUTION

Before an actual lift is undertaken, ensure no water, snow, ice or debris has collected in the sump or elsewhere in or on the unit. Such accumulations will add substantially to the equipment's lifting weight.

In the event of extended lifts or where hazards exist, the lifting devices should be used in conjunction with safety slings placed under the unit.

Anchoring

The unit must be properly anchored in place.
Refer to the suggested support details on the certified drawing for locations of the mounting holes. Anchor bolts must be provided by others.
Holes suitable for 13 mm bolts are provided in the bottom flange of the cooler support structure for bolting the unit to the support beams.

Leveling

The unit must be level for proper operation and ease of piping.
The unit should be level to 0,5 mm/m over the unit length and width.
Support beams must also be level as shims should not be used between pan and support beams to level the unit.

Connecting pipework

All piping external to BAC cooling equipment must be supported separately.
In case the equipment is installed on vibration rails or springs, the piping must contain compensators to eliminate vibrations carried through the external pipework.

Purge requirements

The installer of BAC closed circuit cooling towers must ensure a proper air purging of the system prior to operation.
Entrained air can restrict the capacity of the cooler, resulting in higher process temperatures.
All connections (installed by others) must be leak free and tested accordingly.

Freeze protection

These products must be protected against damage and/or reduced effectiveness due to possible freeze-up by mechanical and operational methods. Please contact your local BAC Balticare representative for recommended protection alternatives.

Safety precautions

All electrical, mechanical and rotating machinery constitutes a potential hazard, particularly for those not familiar with its design, construction and operation. Accordingly, adequate safeguards (including use of protective enclosures where necessary) should be taken with this equipment both to safeguard the public (including minors) from injury and to prevent damage to the equipment, its associated system and the premises.
If there is doubt about safe and proper rigging, installation, operation or maintenance procedures, contact the equipment manufacturer or his representative for advice.
When working on operating equipment, be aware that some parts may have an elevated temperature. Any operations on elevated level have to be executed with extra care to prevent accidents.

AUTHORIZED PERSONNEL

The operation, maintenance and repair of this equipment should be undertaken only by personnel authorized and qualified to do so. All such personnel should be thoroughly familiar with the equipment, the associated systems and controls and the procedures set forth in this and other relevant manuals. Proper care, personal protective equipment, procedures and tools must be used in handling, lifting, installing, operating, maintaining and repairing this equipment to prevent personal injury and/or property damage. Personnel must use personal protective equipment where necessary (gloves, ear plugs, etc...)

MECHANICAL SAFETY

Mechanical safety of the equipment is in accordance with the requirements of the EU machinery directive.
Depending upon site conditions it also may be necessary to install items such as bottom screens, ladders, safety cages, stairways, access platforms, handrails and toe boards for the safety and convenience of the authorized service and maintenance personnel.
At no time this equipment should be operated without all fan screens in place.
Since the equipment operates at variable speeds, steps must be taken to avoid operating at or near the installation's "critical speed".
For more information consult your local BAC Balticare representative.

ELECTRICAL SAFETY

No service work should be performed on or near the fans unless motors are electrically isolated.

LOCAL REGULATIONS

Installation and operation of cooling equipment may be subject to local regulations, such as establishment of risk analysis. Ensure regulatory requirements are consistently met.

CAUTION

Failure to use designated lifting points can result in a dropped load causing severe injury, death and/or property damage. Lifts must be performed by qualified riggers following BAC published Rigging Instructions and generally accepted lifting practices. The use of supplemental safety slings may also be required if the lift circumstances warrant its use, as determined by the rigging contractor.

Non-walking surfaces

Access to and maintenance of any component needs to be performed in accordance with all local applicable laws and regulations. If the proper and required access means are not present, temporary structures need to be foreseen. Under no circumstance can one use parts of the unit, that are not designed as an access mean, unless measures can be taken to mitigate any risks that might occur from doing so.

Modifications by others

Whenever modifications or changes are made by others to the BAC equipment without written permission of BAC, the party who has done the modification becomes responsible for all consequences of this change and BAC declines all liability for the product.

Warranty

BAC will guarantee all products to be free from manufactured defects in materials and workmanship for a period of 24 months from the date of shipment. In the event of any such defect, BAC will repair or provide a replacement. For more details, please refer to the Limitation of Warranties applicable to and in effect at the time of the sale/purchase of these products. You can find these terms and conditions on the reverse side of your order acknowledgement form and your invoice.

General notes

1. The equipment arrives on site by truck.
   It is recommended to unload the unit with a crane. If the adiabatic pre-cooling sections for the TrilliumSeries are crated separately, a forklift should be used for unloading of the crate with adiabatic pre-coolers.
   A crane must always be used to unload the unit from the truck. Do not attempt to unload the unit using a forklift.
2. Spreader bars of the full width of the section must be used between the lifting cables to prevent damage to the section.
3. For extended lifts or where hazards exist, it is recommended to use the lifting devices in conjunction with safety slings placed under the unit.
4. For each unit, only one lift is required. Lifting ears are foreseen on each unit.
5. Attach the lifting devices to the unit as per rigging methods below. Do not use lifting hooks to lift the unit, use shackles (max. Ø 39 mm) as shown on below picture. Unload the unit from the truck.

Use shackles (max. Ø 39 mm) to lift the unit

6. Install the unit in its final position and anchor to the support beams (supplied by others).

When the unit is installed, all metal parts created by drilling, fastening self tapping screws, grinding, welding or other mechanical works must be removed from the unit. If they remain on the unit (typically on the double break flanges) this could lead to corrosion and eventually coating damage.

CAUTION

Before an actual lift is undertaken, ensure no water, snow, ice or debris has collected in the unit. Such accumulations will add substantially to the equipment's lifting weight.

Rigging method

To avoid damage during hoisting, a spreader beam should be used and the angles shown in the diagrams below must be observed.

END VIEW

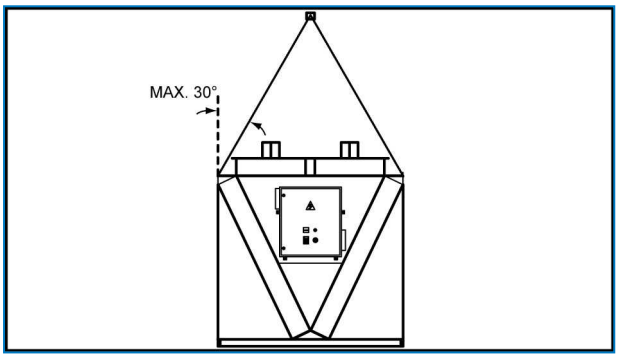

End view

SIDE VIEW

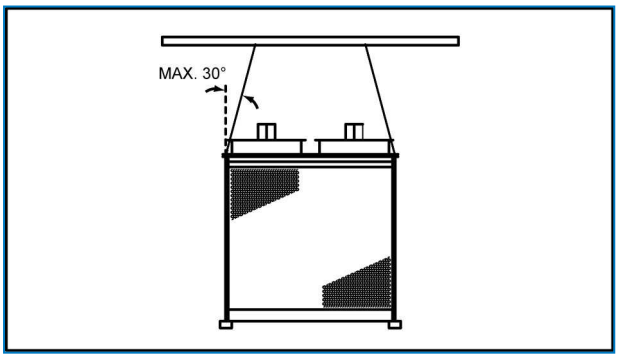

4-fan unit

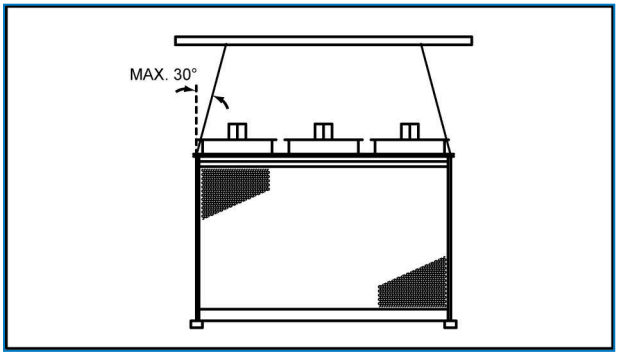

6-fan unit

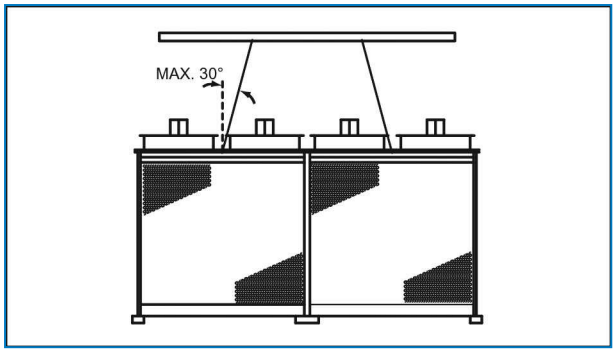

8-fan unit

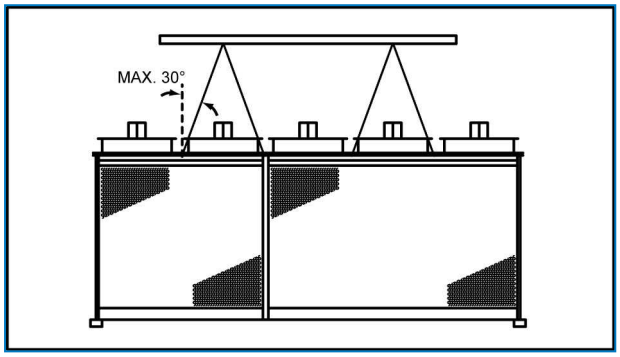

10-fan unit

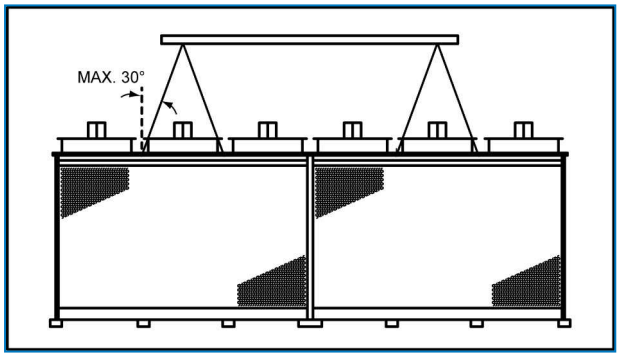

12-fan unit

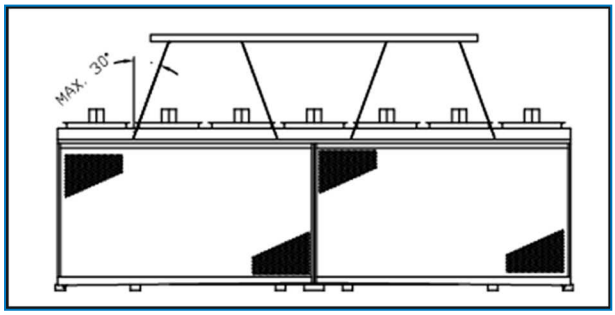

14-fan unit

Installation adiabatic pre-cooler

1. REMOVAL OF CRATING

Remove crating of pre-cooling sections of the TrilliumSeries Coolers.

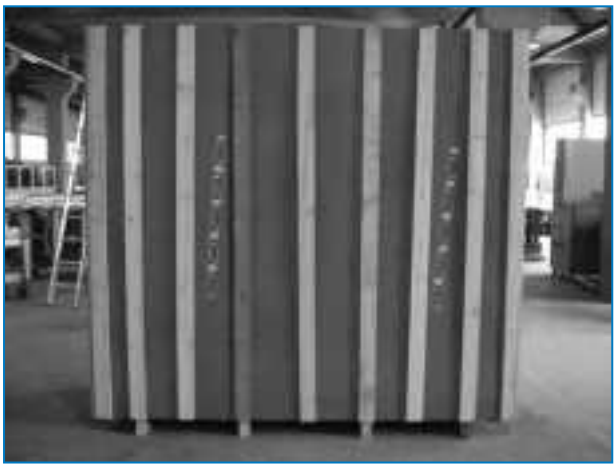

Crate with adiabatic pre-cooling sections

Front view after crate removal

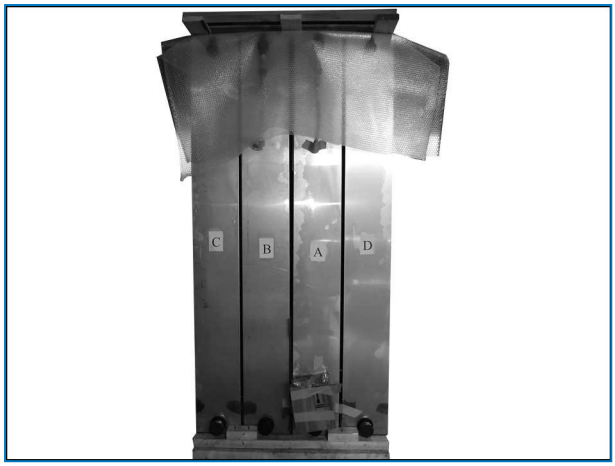

Side view after crate removal

2. REMOVAL OF PRE-COOLER MEDIA

The pre-cooler media have been placed inside the stainless steel frames for shipment and need to be removed before installation of the empty pre-cooling frames on the dry cooler. Remove the pre-cooler media as follows:

Removal of top plate

Removal of green water distribution pads

Removal of pre-cooler media

Empty pre-cooler frame

3. ATTACHMENT OF PRE-COOLER FRAME

Attach the empty pre-cooler frames to the dry unit, using the stainless steel hardware supplied. Place the different pre-cooler frames such that the water distribution piping between sections can be connected, and the copper water piping installed on the unit connects to the water flow meter of the pre-cooling sections.

Installation of empty pre-cooler frame at dry unit.

The pre-cooler sections are marked with the letters A, B, C and D to indicate their position on the V-type dry unit. The dry unit is marked with the corresponding letters.

Attaching pre-cooler frame to dry unit with stainless steel hardware.

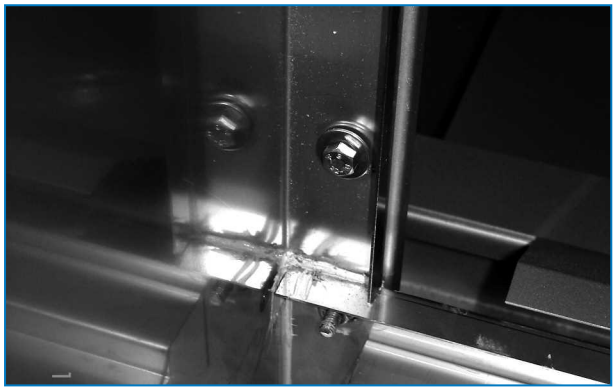

Stainless steel bolts and nuts connecting pre-cooler frame to dry unit flanges.

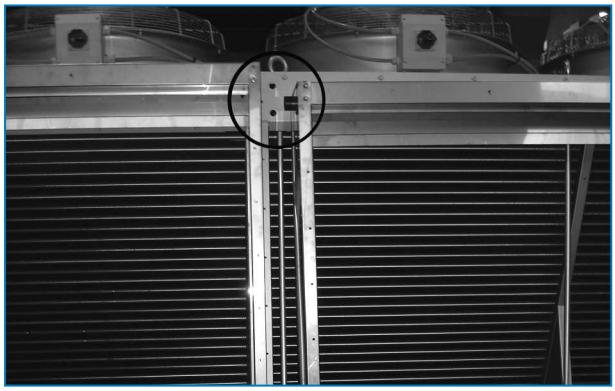

Water distribution piping of pre-cooler sections interconnection.

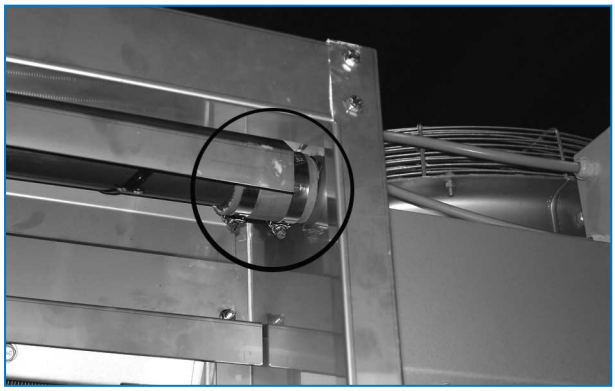

Rubber sleeve used to connect with water distribution header of next section.

4. INTERCONNECTION OF PRE-COOLER SECTIONS

Interconnect pre-cooler sections with the stainless steel connection plates.

Empty pre-cooler frame attached.

Side-by-side pre-cooler frames connected with stainless steel connection plates.

5. RE-INSTALLATION OF THE PRE-COOLER MEDIA

Re-install the pre-cooler medium (2) and the water distribution pads (1) placed on top of the pre-cooler medium. Re-install the top plate covering the water distribution section.

Installation of pre-cooler media

CAUTION

The pre-cooling media have a front side and a back side and need to be (re)installed in the correct position to ensure full wetting over the depth of the media and to ensure maximum efficiency. The blue coloured side needs to be at the outside.

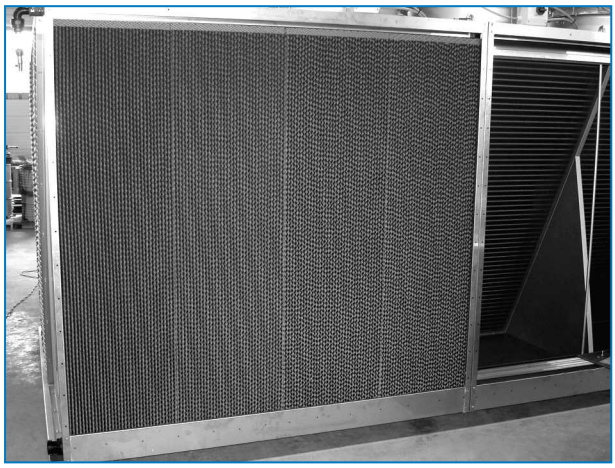

Continue with installation of pre-cooler media

Re-installation of top plate.

6. CONNECTION OF WATER INLET

At water inlet side, connect the flexible water hose to the copper water distribution piping pre-installed on the unit.

Connection of pre-cooler water inlet to the pre-installed copper water distribution piping.

7. CONNECTION OF DRAINS

Connect bottom water drains of all pre-cooler sections at both sides of the unit to evacuate excess water.
The surplus of water distributed over the adiabatic pre-cooling media during adiabatic operation is collected into a gutter and drained to the sewer via one or two different drains per pre-cooler side.
8-fan, 10-fan and 12-fan coolers are equipped with 4 separately shipped adiabatic pre-cooling sections, 2 per side.
Each adiabatic pre-cooler section is equipped with a separate bottom drain guaranteeing full emptying and drying of the gutter system after each adiabatic cycle.
Refer to the table below for the number of adiabatic pre-cooler sections and number of drains per model.

Model	Number of fans	Number of adiabatic pre-cooling sections/cooler	Number of bottom drains/cooler
DFCV-EC9122-*	4	2	2
DFCV-EC9123-*	6	2	2
DFCV-EC9124-*	8	4	4
DFCV-EC9125-*	10	4	4
DFCV-EC9126-*	12	4	4
DFCV-EC9127-*	14	4	4

Number of adiabatic pre-cooler sections and drains

Each pre-cooler section has a sloping pan, assuring complete water drainage and discharge of any floating solids to the sewer. Larger debris will however accumulate and settle in the gutter system and may be too large to drain via the bottom drain and finally may block the bottom drain.

Draining system – inside

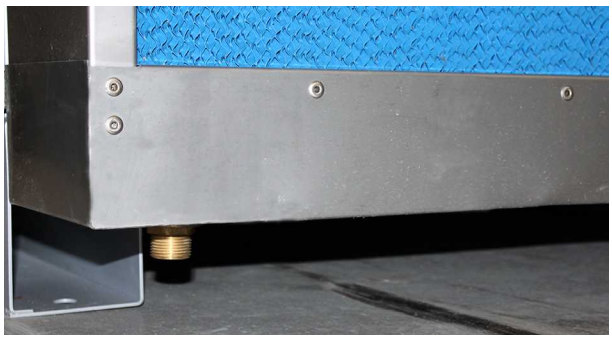

Draining system - outside

It is therefore necessary to regularly clean the adiabatic gutter system to remove all solids. Access for cleaning is given to the inside of the gutter system after removal of the pre-cooling media. For cleaning sequence see table "About rigging and installation" on page 2

Installation of screw-on flanges

Care must be taken when installing screw-on flanges on the fluid-connections of the unit to make sure no forces are transferred from the flange to the copper header of the unit. These forces may damage the header and result in coil leaks.
Apply the proper opposite force by means of a chain pipe wrench, as shown in the following picture to make sure no force is put on the copper tubes.

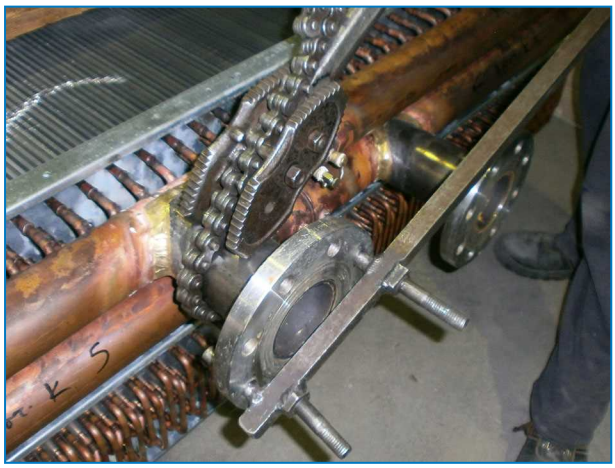

Installing screw-on flange

4

DFCV-AD-EC
OPTIONAL ACCESSORIES ASSEMBLY

All optional accessories are factory installed.

5 DFCV-AD-EC
INSPECTION PRIOR TO START-UP

Start-up and Commissioning

ROTATION OF FANS

Fans must rotate without obstruction in the direction indicated by arrows on the equipment.

MOTOR VOLTAGE AND CURRENT

Check the voltage and the current of all three legs of the fan motors. The current should not exceed the nameplate rating. After prolonged shutdown the motor insulation should be checked with a Megger insulation tester prior to restarting.
The voltage must not fluctuate more than +/-10% and the imbalance between phases must not be greater than +/-2%.

UNUSUAL NOISE AND VIBRATIONS

Unusual noise and/or vibration are the result of malfunctioning of mechanical components or operational problems (e.g. unwanted ice formation). If this occurs, a thorough inspection of the entire unit followed by immediate corrective action is needed. If required, consult your local BAC Balticare representative for assistance.

PURGE REQUIREMENTS

The installer of BAC closed circuit cooling towers must ensure a proper air purging of the system prior to operation. Entrained air can restrict the capacity of the cooler, resulting in higher process temperatures.
All connections (installed by others) must be leak free and tested accordingly.

Electrical Panel

ELECTRICAL PANELS

Each unit is equipped with a control panel and a power panel.
The fan speed is controlled and the adiabatic pre-cooling is activated by a PLC integrated into the electrical panel.

When operating above nominal speed, be aware of the potential risk for overload or mechanical damages.

Control panels

The fan speed is controlled on the basis of the actual process fluid temperature at the exit of the unit and the design leaving temperature, ensuring a minimum in electrical consumption and noise levels.
The adiabatic pre-cooling will be activated and stopped on the basis of a pre-programmed logical combination of the fan speed and the ambient temperature (release set-point). Default settings will not activate adiabatic pre-cooling unless all fans are running at maximum permissible speed and the dry-to-adiabatic release set-point is reached.
The adiabatic control logic is pre-programmed and is ready for operation.
Depending on the actual size of the installation, the controller pre-programmed PI process parameters may need to be adjusted.

ELECTRICAL FIELD WIRING

CAUTION

All operations described below must be performed by a licensed electrical technician and must comply with local regulations.

The equipment is standard provided with a door interlocked main power switch (Q_0), which is factory fitted.
Connect electrical power to the power switch through a 3-pole cable, with ground, of adequate cross section for the main fuse rating.

The power tension must not fluctuate more than ± 10%. The imbalance between the phases must not be greater than ± 2%.

Connect the immersion sensor to the terminal strip as indicated in the wiring diagram.

PRE-COMMISSIONING

1. With main power switch open, check all electrical connections in electrical panel to be sure that they are tight and provide good electrical contact. Although connections were tightened at the factory, they may have loosened enough in shipment to cause a malfunction.
2. Check and inspect all water piping. Make sure flow direction is correct in counterflow, as shown by the arrows on the connectors.
3. Check that the immersion sensor is properly located in the main cold water pipe so that the water is well mixed where the temperature is measured.

LEGEND

Main electrical power panel	
Q0	Main power switch
F0	Magnetic main power circuit breaker
FA1	Auxiliary fuses - Transformer T1
FA2	Auxiliary fuses - 230 V supply
FA3	Auxiliary fuses - 24 V supply
T1	Transformer 400/ 0 – 230 - 24 V
F1, F2, F3, etc.	Circuit breakers
F1, F2, F3, etc.	EC-Motor circuit breakers
C01	Power failure reset relay
S0	Emergency stop switch
S01	Power failure reset button
H0	Indicating lamp
K0	General contactor relay (optional)
DVW	Pad maintenance switch
DV	Solenoid power supply
CV1, CV2	Valves auxiliary relay
VH1, VH2	City water solenoid valves
VD1, VD2	Drain solenoid valves
PCO	Controller
DPP	Ambient air sensor
AS1, (AS2)	Fluid temperature sensor
TH	Electrical panel - Ventilation thermostat
MF	Electrical panel ventilator
Q1, Q2, Q3 etc.	Thermal overload relay
QBO	Power inverter by-pass switch
C0	Control relay
K1, K2, K3 etc.	Fan contactor relay
INV	Inverter
B1-1	General start button (optional)
B2-1	General stop button (optional)

Legend for electrical panel with Variable Frequency Drive

Electrical control panel	
DVW	Pad maintenance switch
DV	Solenoid power supply
CV1, CV2	Valves auxiliary relay
VH1, VH2	City water solenoid valves
VD1, VD2	Drain solenoid valves
PCO	Controller
DPP	Ambient air sensor
AS1, (AS2)	Fluid temperature sensor

Legend for electrical control panel with EC-fans

START-UP

1. Turn the main power switch Q0, main fuses FO and auxiliary control circuit fuses FA1, FA2 to the “off” position. Put the circuit breakers F1, F2 etc. in the “off” position. Put the circuit breaker DV on the electrical control panel in the “off” position. Measure the mains voltage on the electrical power panel.
2. Turn the main power switch Q0 (and the “Start” button of the general contactor relay K0 if ordered as option) “on”. Place the main fuses FA1, FA2 to the “on” position. The amber indicating lamp on the front panel lights up. Put the circuit breakers F1, F2, F3 etc. in the “on” position. Press the power failure reset button S01. Measure the main voltage on the Eeectrical control panel.
3. AUTOMATIC OPERATION: put the switch DVW in position II(automatic operation). Make sure that all the necessary temperature probes are properly installed and wired. Put the circuit breaker DV in the “on” position. The PCO controller is energized. For detailed starting instructions please refer to the Operating and Maintenance Instructions, section Operating Instructions, subsection"Operating instructions for digital controller".
4. The unit will now operate according to the load demand. When the fans reach the maximum fan speed; the controller will energize the adiabatic system. The two sides of the pre-cooler controlled in sequence by the controller, by energising the appropriate solenoid valves.

EMERGENCY STOP

A red mushroom switch S_0S_1 on the front panel is provided to allow the unit emergency stop in case of malfunction. The unit can be re-started by rotating the
S_0S_1 emergency switch, as shown by its arrow and then following the starting procedure of the unit.

WEEK-END OR TEMPORARY SHUTDOWN

The unit must be shutdown by the inverter's "ON/OFF" variable on the digital controller either locally or through the BMS system. Another option is to use the dry contact wired between Y6:1 and Y6:3 (contact is not factory supplied and not wired).
The unit must be shutdown by the "ON/OFF" switch of the digital controller either locally or through the BMS system.
This procedure will ensure that the drain valves VD1 and VD2 will remain open and the city valves VH1 and VH2 closed.

If the unit is shut down by the main power switch, all the valves will close, risking stagnant water in the copper tubes.

TrilliumSeries Coolers with factory installed control panel with Variable Frequency Drive

ELECTRICAL PANEL

All units are equipped with an electrical panel with Variable Frequency Drive.

When operating above nominal speed, be aware of the potential risk for overload or mechanical damages.

Control panel with Variable Frequency Drive

The fan speed is controlled on the basis of the actual process fluid temperature at the exit of the unit and the design leaving temperature, ensuring a minimum in electrical consumption and noise levels.
The adiabatic pre-cooling will be activated and stopped on the basis of a pre-programmed logical combination of the fan speed and the ambient temperature (release set-point). Default settings will not activate adiabatic pre-cooling unless all fans are running at maximum permissible speed and the dry-to-adiabatic release set-point is reached.
The adiabatic control logic is pre-programmed and is ready for operation.
Depending on the actual size of the installation, the controller pre-programmed PI process parameters may need to be adjusted.

ELECTRICAL FIELD WIRING

CAUTION

All operations described below must be performed by a licensed electrical technician and must comply with local regulations.

The equipment is standard provided with a door interlocked main power switch (Q_0), which is factory fitted.
Connect electrical power to the power switch through a 3-pole cable, with ground, of adequate cross section for the main fuse rating.

The power tension must not fluctuate more than ± 10%. The imbalance between the phases must not be greater than ± 2%.

Connect the immersion sensor to the terminal strip as indicated in the wiring diagram.

PRE-COMMISSIONING

1. With main power switch open, check all electrical connections in electrical panel to be sure that they are tight and provide good electrical contact. Although connections were tightened at the factory, they may have loosened enough in shipment to cause a malfunction.
2. Check and inspect all water piping. Make sure flow direction is correct in counterflow, as shown by the arrows on the connectors.
3. Check that the immersion sensor is properly located in the main cold water pipe so that the water is well mixed where the temperature is measured.

LEGEND

Main electrical power panel	
Q0	Main power switch
F0	Magnetic main power circuit breaker
FA1	Auxiliary fuses - Transformer T1
FA2	Auxiliary fuses - 230 V supply
FA3	Auxiliary fuses - 24 V supply
T1	Transformer 400/ 0 – 230 - 24 V
F1, F2, F3, etc.	Circuit breakers
F1, F2, F3, etc.	EC-Motor circuit breakers
C01	Power failure reset relay
S0	Emergency stop switch
S01	Power failure reset button
H0	Indicating lamp
K0	General contactor relay (optional)
DVW	Pad maintenance switch
DV	Solenoid power supply
CV1, CV2	Valves auxiliary relay
VH1, VH2	City water solenoid valves
VD1, VD2	Drain solenoid valves
PCO	Controller
DPP	Ambient air sensor
AS1, (AS2)	Fluid temperature sensor
TH	Electrical panel - Ventilation thermostat
MF	Electrical panel ventilator
Q1, Q2, Q3 etc.	Thermal overload relay
QBO	Power inverter by-pass switch
C0	Control relay
K1, K2, K3 etc.	Fan contactor relay
INV	Inverter
B1-1	General start button (optional)
B2-1	General stop button (optional)

Legend for electrical panel with Variable Frequency Drive

Electrical control panel	
DVW	Pad maintenance switch
DV	Solenoid power supply
CV1, CV2	Valves auxiliary relay
VH1, VH2	City water solenoid valves
VD1, VD2	Drain solenoid valves
PCO	Controller
DPP	Ambient air sensor
AS1, (AS2)	Fluid temperature sensor

Legend for electrical control panel with EC-fans

START-UP

1. Turn the main power switch Q0, main fuses F0 and auxiliarycontrol circuit fuses FA1, FA2, FA3 to the “off” position. Put the circuit breakers F1, F2, F3 etc. in the “off” position. Measure the mains voltage.
2. Turn the main power switch Q0 (and the “Start” button of the general contactor relay if ordered as option) “on” to power the inverter; its LCP (Local Control Panel) is energised. Turn powerswitch QBO to position I, and the fans are powered by the inverter (in position “II” the fans are powered directly from the mains, bypassing the inverter). Note: When inverter is bypassed by switch QBO, the fan motors should be started gradually by turning switches F1, F2, F3 etc. one by one. Place the main fuses FA1, FA2, FA3 to the “on” position. The amber indicating lamp on the front panel lights up. Put the circuit breakers F1, F2, F3 etc.in the “on” position.
3. MANUAL INVERTER OPERATION: by pressing “HAND ON” on the inverter’s LCP, the fans start at the minimum rpm at which the inverter was programmed. By pressing arrow key “↑” on the LCP, the maximum programmed rpm can be reached and by pressing arrow key “↓“ the rpm can be reduced to the minimumprogrammed rpm. At this stage the fans’ rpm are not regulated by any control device. Check the fan rotation (all fans are factorywired to run in the same direction). Change phases if necessary to obtain correct fan rotation, as shown by arrow on the fan cowl.
4. By pressing key “OFF” the inverter stops the fan operation.
5. AUTOMATIC OPERATION: turn on electric solenoid valve switch DV to activate the solenoid valves DVW in position A (automatic operation) and press “Auto/Start” on the inverter’s LCP. Makesure that all the necessary temperature probes are properly installed and wired. For detailed starting instructions please refer to the “TrilliumSeries Operating and Maintenance Instructions, section Operating instructions, subsection Operating instructions for digital controller”.
6. The unit will now operate according to the load demand. When the inverter reaches it's maximum fan speed it will energize the adiabatic system. The two sides of the pre-cooler are controlled in sequence by the controller, by energising/de-energising the appropriate solenoïd valves.

EMERGENCY STOP

A red mushroom switch S_0S_1 on the front panel is provided to allow the unit emergency stop in case of malfunction. The unit can be re-started by rotating the
S_0S_1 emergency switch, as shown by its arrow and then following the starting procedure of the unit.

WEEK-END OR TEMPORARY SHUTDOWN

The unit must be shutdown by the inverter's "ON/OFF" variable on the digital controller either locally or through the BMS system. Another option is to use the dry contact wired between Y6:1 and Y6:3 (contact is not factory supplied and not wired).

The unit must be shutdown by the "ON/OFF" switch of the digital controller either locally or through the BMS system.
This procedure will ensure that the drain valves VD1 and VD2 will remain open and the city valves VH1 and VH2 closed.

If the unit is shut down by the main power switch, all the valves will close, risking stagnant water in the copper tubes.

FURTHER ASSISTANCE & INFORMATION

Balticare

BAC has established a specialized independent total care company called Balticare. The BAC Balticare offering involves all elements required to ensure a safe and efficient operation of your evaporative cooling products. From a full range of risk assessment to selective water treatment, training, testing, record keeping and annual system overview.
For more details, contact your local BAC representative for further information and specific assistance at www.BaltimoreAircoil.eu

More information

REFERENCE LITERATURE

- Eurovent 9-5 (6) Recommended Code of Practice to keep your Cooling System efficient and safe. Eurovent/Cecomaf, 2002, 30p.
- Guide des Bonnes Pratiques, Legionella et Tours Aéroréfrigérantes. Ministères de l'Emploi et de la Solidarité, Ministère de l'Economie des Finances et de l'Industrie, Ministère de l'Environnement, Juin 2001, 54p.
- Voorkom Legionellose. Minsterie van de Vlaamse Gemeenschap. December 2002, 77p.
- Legionnaires' Disease. The Control of Legionella Bacteria in Water Systems. Health & Safety Commission. 2000, 62p.
- Hygienische Anforderungen an raumlufttechnische Anlagen. VDI 6022.

INTERESTING WEB SITES

- www.BaltimoreAircoil.eu
- www.eurovent-certification.com
- www.ewgli.org
- www.ashrae.org
- www.uniclima.org
- www.aicvf.org
- www.hse.gov.uk
-

ORIGINAL DOCUMENTATION

This manual is originally made in English. Translations are provided for your convenience. In the event of discrepancies, the English original text shall prevail over the translation.

COOLING TOWERS

CLOSED CIRCUIT COOLING TOWERS

ICE THERMAL STORAGE

EVAPORATIVE CONDENSERS

HYBRID PRODUCTS

PARTS & SERVICES

BLUE by nature
GREEN at heart

www.BaltimoreAircoil.eu

info@BaltimoreAircoil.eu

Please refer to our website for local contact details.

Industriepark - Zone A, B-2220 Heist-op-den-Berg, Belgium

© Baltimore Aircoil International nv