BALTIMORE
AIRCOIL COMPANY

PTE Open Cooling Towers

RIGGING AND INSTALLATION INSTRUCTIONS

About Rigging and Installation

The BAC equipment should be rigged and installed as outlined in this bulletin.
These procedures should be thoroughly reviewed prior to the rigging and operation to acquaint all personnel with the procedures to be followed and to assure that all necessary equipment will be available at the jobsite.
Be sure to have a copy of the unit certified drawing available for reference. If you do not have a copy of this drawing or if you need additional information about this unit, contact the local BAC Balticare representative. His name and phone number can be found on the BAC website: www.BaltimoreAircoil.eu. The model type and serial number of your equipment are indicated on the unit nameplate.

Recommended Maintenance and Monitoring Programme

Checks and Adjustments	Start-Up	Weekly	Monthly	Quarterly	Every 6 Months	Annually	Shutdown
Cold Water Basin and Basin Strainers	X			X			
Operating level and make-up	X		X				
Blow down	X		X				
Sump heater Package	X				X		
Belt tension	X		X				
Drive alignment	X					X	
Drive System	X				X		
Locking Collar	X						
Rotation of fan(s) and pump(s)	X						
Motor voltage and current	X			X			
Unusual noise and/or vibration	X		X				

Inspections and Monitoring	Start-Up	Weekly	Monthly	Quarterly	Every 6 Months	Annually	Shutdown
General condition	X		X				
Heat transfer section and drift eliminators	X				X		
Finned discharge coil (optional)	X					X	
Combined Inlet Shields	X			X			
Water distribution	X				X		
Fan shaft & Axial Fan	X			X			
Fan Motor	X			X			
Electric Water Level Control Package (option)	X				X		
TAB test (dip slides)	X	X					
Circulating water quality	X		X				
System overview	X					X	
Recordkeeping	as per event						

Lubrication	Start-Up	Weekly	Monthly	Quarterly	Every 6 Months	Annually	Shutdown
Fan shaft bearings	X			X			X
Motor bearings*	X				X		
Adjustable motor base	X				X		X

* only for motors with grease fittings with typical frame size > 200L (>30 kW)

Cleaning procedures	Start-Up	Weekly	Monthly	Quarterly	Every 6 Months	Annually	Shutdown
Mechanical cleaning	X					X	X
Disinfection**	(X)					(X)	(X)
Drain Basin							X

** depends on applied code of practice

Notes

1. Water Treatment and auxiliary equipment integrated in the cooling system may require additions to the table above. Contact suppliers for recommended actions and their required frequency.
2. Recommended service intervals are for typical installations. Different environmental conditions may dictate more frequent servicing.
3. When operating in ambient temperatures below freezing, the unit should be inspected more frequently (see Cold Weather Operations in the appropriate Operating and Maintenance Instructions).
4. For units with Belt Drive, tension on new belts must be readjusted after the first 24 hours of operation and monthly thereafter.

Table of Contents

RIGGING AND INSTALLATION INSTRUCTIONS

1	**General Information**	**5**
	About Engineering and Application Practices	5
	Shipping	5
	Inspection Before Rigging	5
	Unit Weights	7
	Anchoring	7
	Leveling	7
	Electrical connections	7
	Connecting Pipework	8
	Freeze Protection	8
	Bleed Line Installation	8
	Safety Precautions	8
	Non-walking Surfaces	9
	Modifications by others	9
	Warranty	10
2	**Rigging**	**11**
	General Notes	11
	Rigging Method Water Collection Module	16
	Rigging Method Heat Transfer Module	17
	Rigging Method Air Handling Module	17
	Rigging Method Finned Discharge Coil	17
	Rigging Method Discharge Attenuation	18
3	**Section Assembly**	**19**
	Sealing Method	19
	External Motor Support Installation	20
	External Motor Installation	21
	Assembly of Multiple-Cell Units	22
4	**Optional Accessories Assembly**	**28**
	General	28
	Discharge Attenuator	28
	Clean Out Port	29
	Installation of the Optional Side Outlet Depressed Sump Box	30
	Optional Bottom Connection	31
5	**Inspection Prior to Start-up**	**33**
	General	33
6	**Further Assistance & Information**	**34**
	Balticare	34
	More Information	34

1 PTE GENERAL INFORMATION

About Engineering and Application Practices

This bulletin only refers to the assembly of the unit. To ensure a proper operation, a correct integration of the unit in the overall installation is mandatory. For good engineering and application practices on layout, levelling, connecting pipework, etc., please refer to our website:
http://www.baltimoreaircoil.eu/knowledge-center/application-information.

Shipping

BAC cooling equipment is factory assembled to assure uniform quality and minimum field assembly.
All units ship in three sections as standard.
If discharge sound attenuation and/or finned discharge coil(s) are included in the order, the section(s) ship separately for rigging on site.
For the dimensions and weights of a specific unit or section, refer to the certified drawing.

CAUTION

Do not cover units with PVC eliminators or fill with a plastic tarpaulin. Temperature increase due to sun radiation could deform the fill or eliminators.

Inspection Before Rigging

When the unit is delivered to the jobsite, it should be checked thoroughly to ensure all required items have been received and are free of any shipping damage prior to signing the bill of lading.
The following parts should be inspected:

- Sheaves and belts
- Bearings
- Bearing supports
- Fan motor(s)
- Fan Guards
- Fan(s) and fan shaft(s)
- Wet Deck Surface
- Water distribution system
- Strainers
- Float valve assembly
- Eliminators
- Combined Inlet Shields
- Interior / exterior surfaces

- Miscellaneous items

An envelope with check-list is stored in a wooden no nail crate or a plastic container which is placed in the lower section. For safety reasons, access doors / panels may be sealed with bolts. The following table specifies which wrench is required to open them.

Wrench to open access door	Wrench to open access panel
17 mm	13 mm

Required wrenches to open access door/panel

The wooden no nail crate / plastic container also contains miscellaneous parts such as gasket, hardware and accessory items.
At temperatures below -10°C the butyl sealer tape might loose it's flexibility. We recommend to store the sealer tape in a heated room before using it during rigging at freezing temperatures.

CAUTION

Be sure to remove all miscellaneous items from the pan before the unit is assembled.

If the hardware is packed in a plastic container it is located in the Cold water module (lower section) and fixed to a lifting ear.

Hardware location

If the hardware is packed in a wooden box, it is fixed with cord straps to the pump base

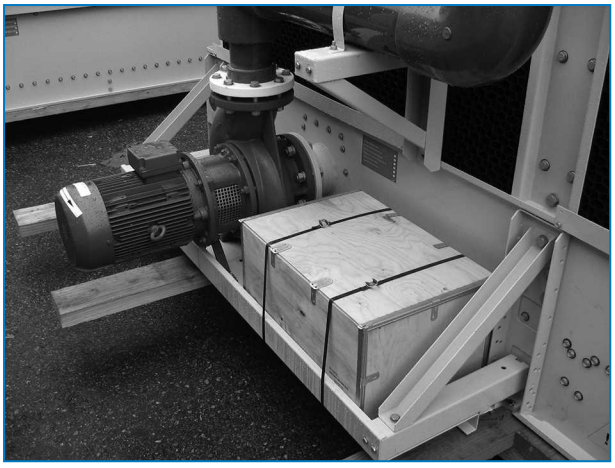

Hardware location

Unit Weights

Before rigging any BAC equipment, the weight of each section should be verified on the unit certified drawing.

These weights are **approximate** and should be confirmed by weighing **before lifting** when available hoisting capacity provides little margin for safety.

CAUTION

Before an actual lift is undertaken, ensure no water, snow, ice or debris has collected IN THE SUMP OR ELSEWHERE in THE UNIT. such accumulations will add substantially to the equipment's lifting weight.

In the event of extended lifts or where hazards exist, the lifting devices should be used in conjunction with safety slings placed under the unit.

Anchoring

The unit must be properly anchored in place.
Refer to the suggested support details on the certified drawing for locations of the mounting holes. Anchor bolts must be provided by others.
Holes suitable for 20 mm bolts are provided in the bottom flange of the lower section for bolting the unit to the support beams.

Leveling

The unit must be level for proper operation and ease of piping.

Electrical connections

The units are delivered with a number of electrical components that need to be connected after rigging. For all electrical components, please refer to the specific wiring diagrams in the submittal package.

Connecting Pipework

All piping external to BAC cooling equipment must be supported separately.
In case the equipment is installed on vibration rails or springs, the piping must contain compensators to eliminate vibrations carried through the external pipework.
Suction pipe sizing should be done according to good practice, which may for larger flows require larger pipe diameters than the outlet connection. In such cases adapter pieces need to be installed.

Freeze Protection

These products must be protected against damage and/or reduced effectiveness due to possible freeze-up by mechanical and operational methods. Please refer to the BAC Product & Application Handbook or contact your local BAC Balticare representative for recommended protection alternatives.

Bleed Line Installation

On all open cooling towers, install a bleed line with valve between the system circulating pump discharge riser and a convenient drain. Locate the bleed line in a portion of the riser piping that drains when the pump is off.
The bleed valve should always be open when the unit is in operation, unless the bleed rate is automatically controlled by a water treatment system.

Safety Precautions

All electrical, mechanical and rotating machinery constitutes a potential hazard, particularly for those not familiar with its design, construction and operation. Accordingly, adequate safeguards (including use of protective enclosures where necessary) should be taken with this equipment both to safeguard the public (including minors) from injury and to prevent damage to the equipment, its associated system and the premises.
If there is doubt about safe and proper rigging, installation, operation or maintenance procedures, contact the equipment manufacturer or his representative for advice.
When working on operating equipment, be aware that some parts may have an elevated temperature. Any operations on elevated level have to be executed with extra care to prevent accidents.

AUTHORIZED PERSONNEL

The operation, maintenance and repair of this equipment should be undertaken only by personnel authorized and qualified to do so. All such personnel should be thoroughly familiar with the equipment, the associated systems and controls and the procedures set forth in this and other relevant manuals. Proper care, personal protective equipment, procedures and tools must be used in handling, lifting, installing, operating, maintaining and repairing this equipment to prevent personal injury and/or property damage. Personnel must use personal protective equipment where necessary (gloves, ear plugs, etc...)

MECHANICAL SAFETY

Mechanical safety of the equipment is in accordance with the requirements of the EU machinery directive.
Depending upon site conditions it also may be necessary to install items such as bottom screens, ladders, safety cages, stairways, access platforms, handrails and toe boards for the safety and convenience of the authorized service and maintenance personnel.
At no time this equipment should be operated without all fan screens, access panels and access doors in place.
When the equipment is operated with a variable fan speed control device, steps must be taken to avoid operating at or near to the fan's «critical speed».
For more information consult your local BAC Balticare representative.

ELECTRICAL SAFETY

Each motor associated with this equipment should be installed with a lockable disconnect switch located within sight of the equipment. No service work should be performed on or near the fans, motor, drives or inside the equipment unless motors, heaters etc. are electrically isolated.

LIFTING

CAUTION

Failure to use designated lifting points can result in a dropped load causing severe injury, death and/or property damage. Lifts must be performed by qualified riggers following BAC published Rigging Instructions and generally accepted lifting practices. The use of supplemental safety slings may also be required if the lift circumstances warrant its use, as determined by the rigging contractor.

LOCATION

All cooling equipment should be located as far away as possible from occupied areas, open windows or air intakes to buildings.

CAUTION

Each unit should be located and positioned to prevent the introduction of discharge air into the ventilation systems of the building on which the unit is located or those of adjacent buildings.

For detailed recommendations on BAC equipment layout, please see the BAC Application Handbook EU-Edition, the BAC website: www.baltimoreaircoil.eu or contact your local BAC-Balticare Representative.

LOCAL REGULATIONS

Installation and operation of cooling equipment may be subject to local regulations, such as establishment of risk analysis. Ensure regulatory requirements are consistently met.

Non-walking Surfaces

Access to and maintenance of any component needs to be performed in accordance with all local applicable laws and regulations. If the proper and required access means are not present, temporary structures need to be foreseen. Under no circumstance can one use parts of the unit, that are not designed as an access mean, unless measures can be taken to mitigate any risks that might occur from doing so.

Modifications by others

Whenever modifications or changes are made by others to the BAC equipment without written permission of BAC, the party who has done the modification becomes responsible for all consequences of this change and BAC declines all liability for the product.

Warranty

BAC will guarantee all products to be free from manufactured defects in materials and workmanship for a period of 24 months from the date of shipment. In the event of any such defect, BAC will repair or provide a replacement. For more details, please refer to the Limitation of Warranties applicable to and in effect at the time of the sale/purchase of these products. You can find these terms and conditions on the reverse side of your order acknowledgement form and your invoice.

2 PTE RIGGING

General Notes

CAUTION

Before an actual lift is undertaken, ensure no water, snow, ice or debris has collected in the sump or elsewhere in the unit. Such accumulations will add substantially to the equipment's lifting weight.

1. All PTE cooling towers are shipped in 2 or 3 sections depending on transport restraints. If finned discharge coils or/and discharge attenuation is/are included in the order, they will be shipped as additional separate sections.
2. PTE open cooling towers are allowed to be lifted in one assembled piece, unless a finned discharge coil is included in the order.

When the unit is installed, all metal parts created by drilling, fastening self tapping screws, grinding, welding or other mechanical works must be removed from the unit. If they remain on the unit (typically on the double break flanges) this could lead to corrosion and eventually coating damage.

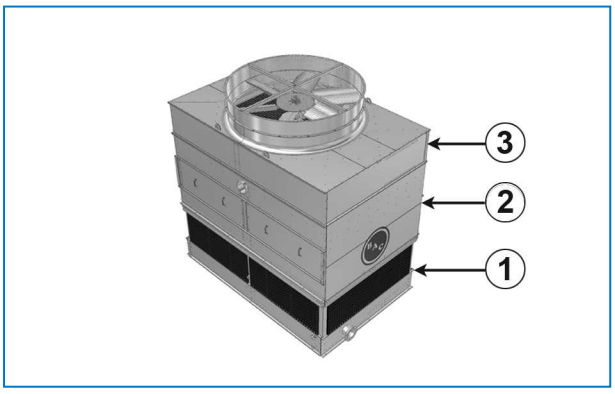

Standard Unit sections

1. Water Collection Module
2. Heat Transfer Module
3. Air Handling Module

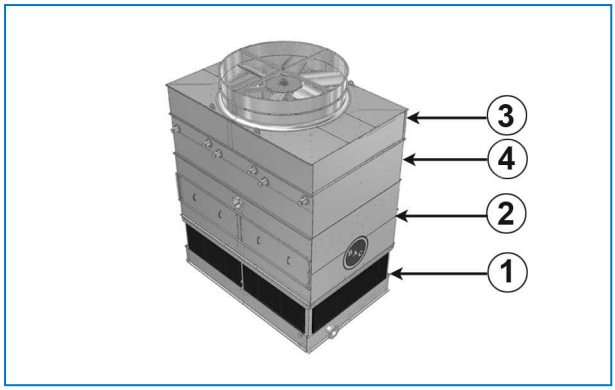

Unit with finned discharge coil

1. Water Collection Module
2. Heat Transfer Module
3. Air Handling Module
4. Finned Discharge Coil

RIGGING OF 2-SECTION COOLING TOWER

1. Rigging sequence for a 2-SECTION TOWER (with optional discharge attenuation) is as follows:

CAUTION

For 2,2 m and 2,4 m wide units the motor base assembly is shipped loose for field installation and must be removed from the water collection module where it is stored for safe transport.

- First lift the water collection module into place (no sealer required).
- Lift the motor base assembly into position next to the access door of the air handling module and fasten. (Only for 2,2 m and 2,4 m wide units.) For detailed information see "External Motor Installation" on page 21.
- Another possibility is to install the motor base assembly on the air handling module PRIOR to lifting and then lift this assembly in one piece (air handling module + motor). However, while installing the motor base, the air handling module cannot rest on the ground. Belts can be installed and tensioned at this moment as well.
- Then lift the assembled heat transfer module and air handling module into place.
- If included in the order lift the discharge attenuator into place.

RIGGING OF 3-SECTION COOLING TOWER

1. Rigging sequence for a 3-SECTION COOLING TOWER (with optional finned discharge coil and discharge attenuation) is as follows:

CAUTION

For 2,2 m and 2,4 m wide units the motor base assembly is shipped loosefor field installations and must be removed from the water collection module where it is stored for safe transport.

- First lift the water collection module into place (no sealer required)

- Then lift the heat transfer module into place and apply foam tape on the top flange where the next section will be positioned. Remove the disposable lifting ears before installing the next section. Re-use the hardware to close-off the holes.
- If included in the order, lift the finned discharge coil into place and remount the lifting ears rotated 180°. Apply foam tape on the top flange, where the next section will be located.
- Then lift the air handling module into place.
- Lift the motor base assembly into position next to the access door of the air handling module and fasten. (Only for 2,2 m and 2,4 m wide units.) For detailed information see "External Motor Installation" on page 21
- Another possibility is to install the motor base assembly on the air handling module PRIOR to lifting and then lift this assembly in one piece (air handling module + motor). However, while installing the motor base, the air handling module cannot rest on the ground. Belts can be installed and tensioned at this moment as well.
- If included in the order lift the discharge attenuator into place.

2. Lifting devices have been provided on all sections. The tables below give the preferred method for rigging each section of a unit.

For additional information see "Rigging" on page 11.

Model	Unit Sections	Number of sections	Rigging Method	Min. Spreader Bar Length (mm)	Min. "H" (mm)	Finned Discharge Coil	Discharge Attenuation	
						Rigging Method	Rigging Method	Min. H. (mm)
PTE-0709x-xx-x1(1)	Water Collection Module	1	A	2800	4300	E	F	2000
	Heat Transfer Module	1	B	2300	N/A			
	Air Handling Module	1	A	2300	3000			
PTE-0809x-xx-x1(1)	Water Collection Module	1	A	2800	4300	E	F	2000
	Heat Transfer Module	1	B	2300	N/A			
	Air Handling Module	1	A	2500	3700			
PTE-0812x-xx-x1(1)	Water Collection Module	1	A	3700	4300	E	F	2000
	Heat Transfer Module	1	B	2500	N/A			
	Air Handling Module	1	A	2500	3700			
PTE-1009x-xx-x1(1)	Water Collection Module	1	A	2800	4300	E	F	2500
	Heat Transfer Module	1	B	3000	N/A			
	Air Handling Module	1	A	3000	4300			
PTE-1012x-xx-x1(1)	Water Collection Module	1	A	3700	4300	E	F	2500
	Heat Transfer Module	1	B	3000	N/A			
	Air Handling Module	1	A	3000	4300			
PTE-1212x-xx-x1(1)	Water Collection Module	1	A	3700	4300	E	F	3000
	Heat Transfer Module	1	B	3700	N/A			
	Air Handling Module	1	A	3700	4900			

Rigging method

(1) This figure represents the number of cells per unit being 1, 2 or 3.

The above table states the rigging method for a single cell unit. For multi-cell units, multiply the number of sections with the number of cells.

3. If the (pump) piping from coil products is split for transport reasons, the piping must be assembled on site by means of a flexible connection (typically a rubber sleeve or coupling).
4. Lifting devices have been provided on all sections. The tables below give the preferred method for rigging each section of a unit.

For additional information see further in this manual under: "Rigging" on page 11.

USE OF DRIFT PINS

The use of drift pins during section assembly is strongly recommended. Follow the below guidelines:

1. Use drift pins in the bolt holes provided. This will guide the section onto the next section.
2. Using at least four drift pins (see figure) in the fastening holes located on the long sides of the sections to align the upper section to the lower section. To avoid incorrect alignment, refer to the below drawing for the position of the fastening holes to be used. Use additional drift pins in the middle of the unit if required, to align long panels. Make sure all holes from upper section and lower section are properly aligned before lowering the upper section completely onto the lower section.

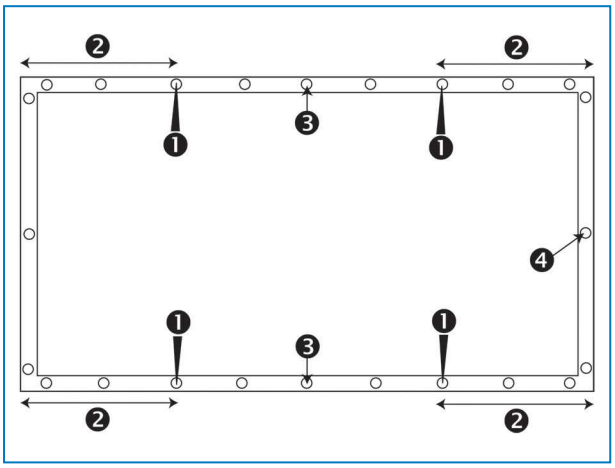

Position of the fastening holes to be used.

1. Drift pin position
2. The distance between the fastening hole in which the drift pin is inserted and the corner should be at least 30 cm
3. Usage of additional drift pin for long sides
4. Fastening hole

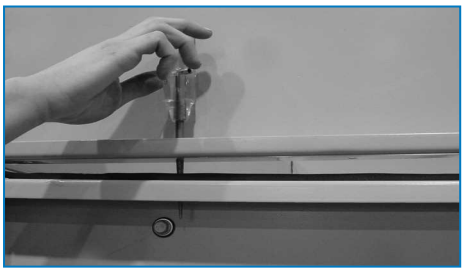

Usage of drift pin to align the screw holes

CAUTION

When lowering a section, ensure nothing can be trapped between the upper and lower flanges.

Rigging Method Water Collection Module

RIGGING METHOD A

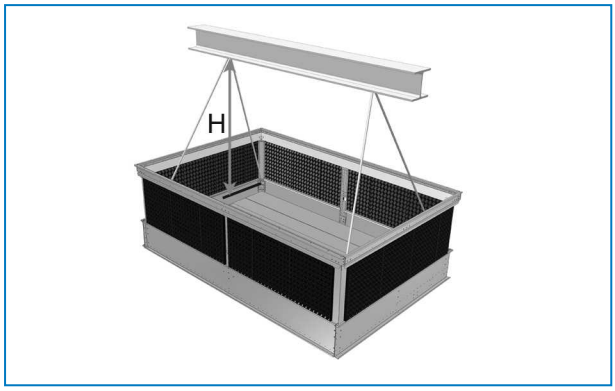

Water Collection Module

Pay attention to the difference in lifting ear and tie down buckle on the lower section.

The **lifting ear** is to be used to unload unit from truck. It is designed for **upward** force.
It is installed on the inside of the water collection module (corner bracket)
The **tie-down buckle** is only to be used to tie down (secure) unit onto truck for transport. It is designed for **downward** force only.
It is installed on the outside of the water collection module and only to be used to tie down (secure) unit onto truck for transport.

CAUTION

Do not use TIE down BUCKLE FOR LIFTING AND LIFTING EARS FOR TIE DOWN PUrPOSE.

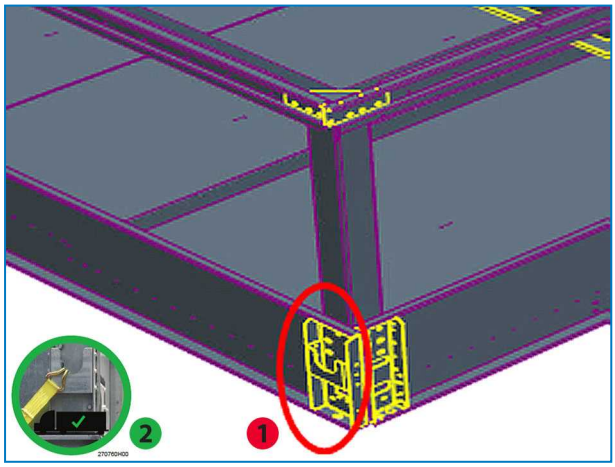

Position tie-down buckle on water collection module

1. Tie -down buckle
2. Proper use of tie down buckle

Rigging Method Heat Transfer Module

RIGGING METHOD B

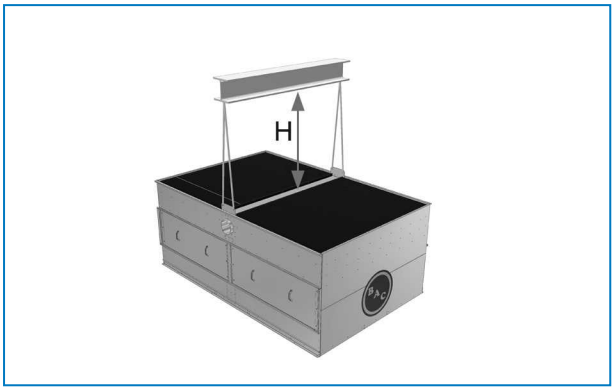

Heat Transfer Module

Rigging Method Air Handling Module

RIGGING METHOD D

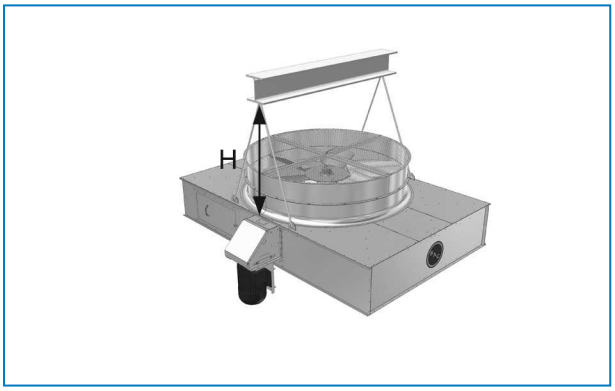

Air Handling Module

Rigging Method Finned Discharge Coil

RIGGING METHOD E

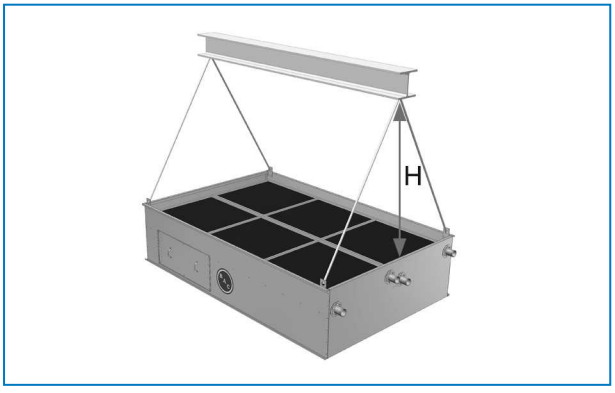

Finned Discharge Coil

Rigging Method Discharge Attenuation

RIGGING METHOD F

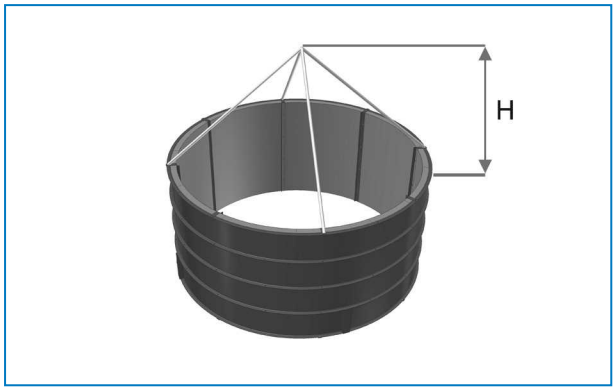

Discharge Attenuation

3 PTE SECTION ASSEMBLY

Sealing Method

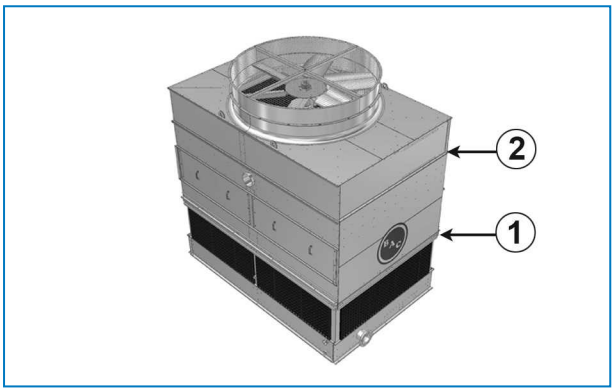

Sealing Method for standard PTE Cooling Tower

1. Joint Method A – InterLok™ casing joint
2. Joint Method B – Foam tape and self-tapping screws

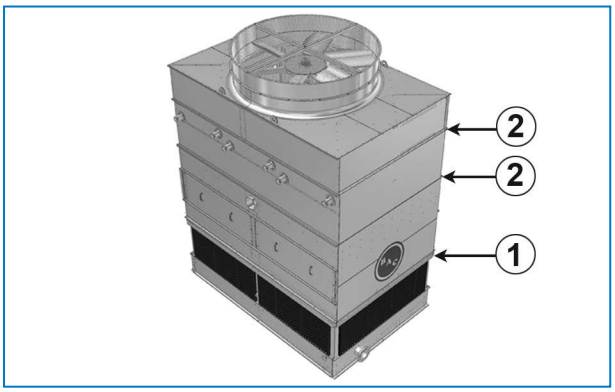

Sealing method for PTE cooling tower with finned discharge coil

1. Joint Method A – InterLok™ casing joint
2. Joint Method B – Foam tape and self-tapping screws

JOINT METHOD A

1. No sealer tape is required on the middle InterLok™ Casing Joint.

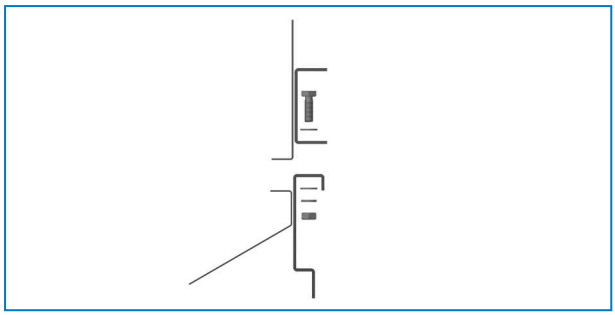

InterLok™ Casing Joint

2. Bolt section in place as illustrated in the figure "InterLok™ Casing Joint", using a 12 mm bolt and flat washer.

JOINT METHOD B

1. Apply a layer of 50x6 mm foam tape around the face of the flange over the centreline of the holes. Ends at the edges must slightly overlap.
2. Using the self-tapping screws, drive screws down through the upper section and into the lower section. Start next to lifting ear towards centre of unit. Continue to install the screws using the drift pin to align the screw holes until all holes are filled with screws

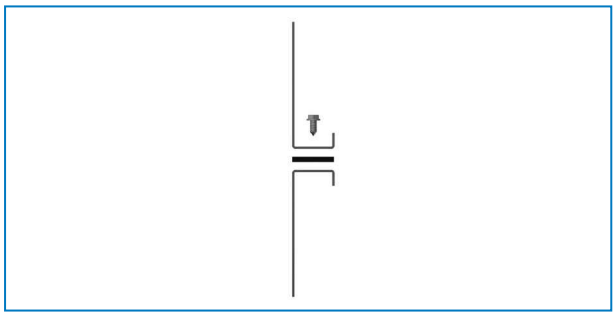

Sealer and Self-tapping Screws

3. Remove any wooden or plastic bracing from around the eliminators or upper section(s).

External Motor Support Installation

1. Locate the mechanical support bolts on the access door side of the mechanical section.
2. Remove bolts but **under no circumstances remove tappers**. Removal of tappers will cause mechanical system to fall.
3. Align davit support with the holes in the mechanical system.
4. Reinstall bolts.

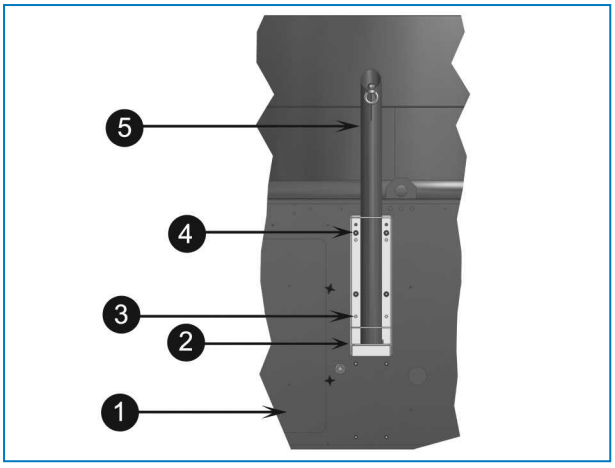

Installation of Motor Removal Davit Support

1. Access Door
2. Motor Davit Support (shipped loose)
3. Bolt, Nuts & Washers. (Use these to install motor davit support)
4. Tappers (4 pieces). Do not remove!
5. Motor Davit (shipped loose)

External Motor Installation

2,2 M AND 2,4 M WIDE UNITS

1. Attach lifting strap to the motor base eyelet and remove the motor and motor base assembly from the cold water basin shipping location. The motor assembly remains vertical to maintain proper alignment during installation.
2. Lift motor assembly into position next to the access door of the air handling module.
3. Attach the assembly to the unit using the six supplied studs and hardware.

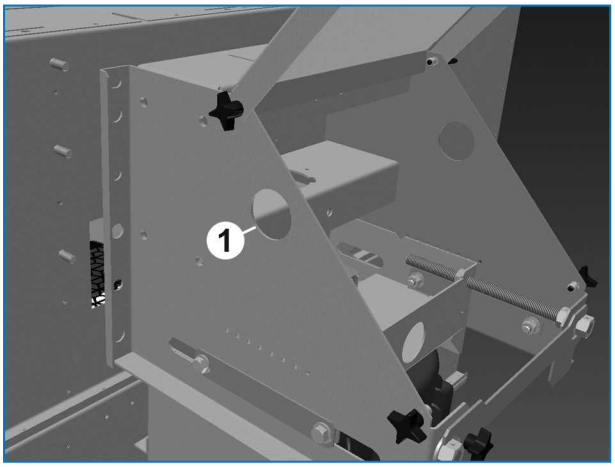

External Motor Mounting – Step 1

1. Motorbase Eyelet

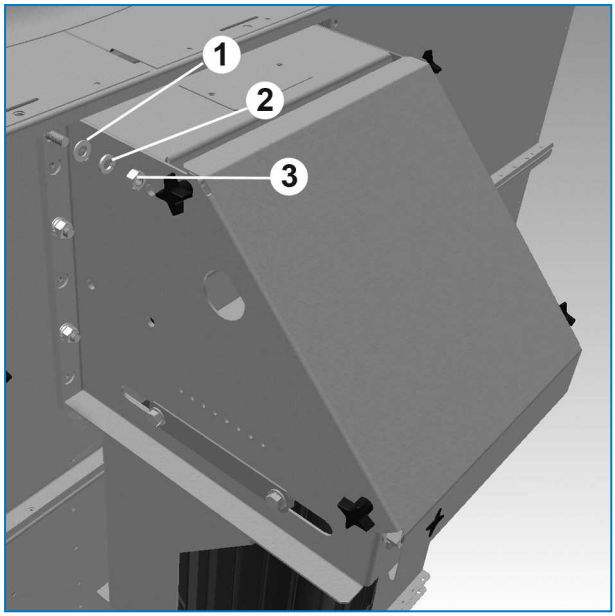

External Motor Mounting – Step 2

1. 12 mm washer
2. 12 mm lock washer
3. 12 mm nut

4. Install belts and check sheave alignment. Finally, tension the belts. For correct tensioning specifications and procedures, refer to the Operating and Maintenance Manual.

All other PTE models have fan motor mounted and tensioned at the factory

Assembly of Multiple-Cell Units

1. Refer to the unit certified print for the proper orientation of each cell. The cell number and "face" are stencilled on the outer basin wall.
2. Multi-cell cooling tower installations may employ flume boxes to equalize the water level in the basin of each cell. Follow directions for details on their installation in the below section "Flume Box Installation".
3. Multi-cell units require water baffles. For details see section "Water Baffle installation".

CAUTION

Ensure that the fan guard is properly installed prior to commencing operation.

FLUME BOX INSTALLATION

1. Position all cells on the unit support with an intermediate distance of 25 mm and bolt in place.
2. Wipe down the mating surface by the flume opening to remove any dirt or moisture that may have accumulated during shipment.
3. Wipe down the flanges on both the flume box and the back-up ring. On one end, apply a layer of 25x3 mm butyl sealer tape around the face of the flange over the centreline of the holes. Do not overlap or stretch too thinly at the corners. When it is necessary to splice the sealer, be sure to press the two ends together to form a smooth, continuous strip.

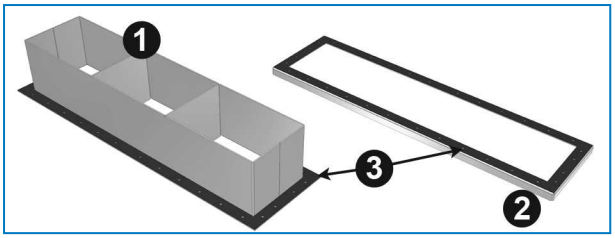

Sealing method for installation of flume box

1. Flume box
2. Back-up ring
3. Butyl sealer 25x3mm

4. Using drift pins to align the bolt holes, place the flume box over the opening in the basin of Cell #1 and fasten into place. Insert the 5/16" self-tapping screws or M8 bolts from the flume box into the basin wall as illustrate in the figure "Bolting method for flume box".

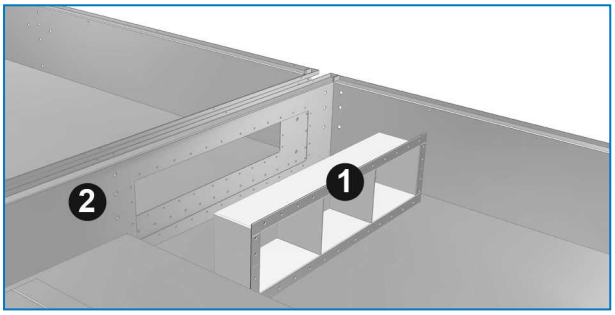

Sliding of Flume Box into whole between Cell#1 and Cell #2

1. Flume box
2. Basin wall Cell#1

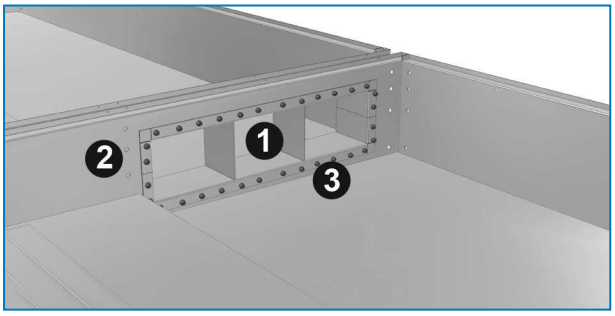

Bolting method for flume box

1. Flume box
2. Basin wall Cell#1
3. 5/16" Self-tapping screws or M8 bolts and nuts

5. Apply a layer of 25 mm x 8 mm butyl sealer tape in the corner between the flume box and basin wall of cell#2 as shown in the following figure.

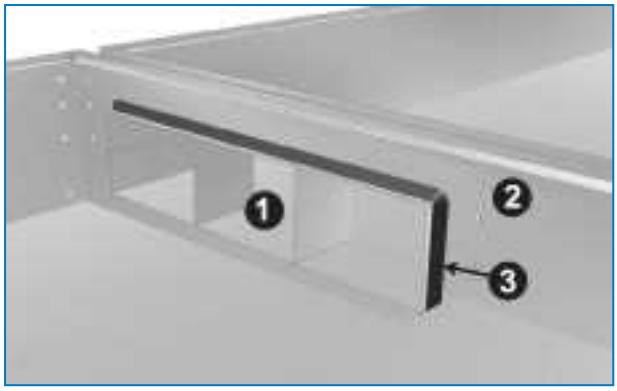

Flume Box Corner Detail

1. Flume box
2. Basin wall Cell#2
3. Butyl sealer tape 25x8mm

6. Using drift pins to align the bolt holes, place the back up ring over the flume box in cell #2. Insert the 5/16" self-tapping screws or bolts M8 from the back up plate into the basin wall as illustrated in the following figures.

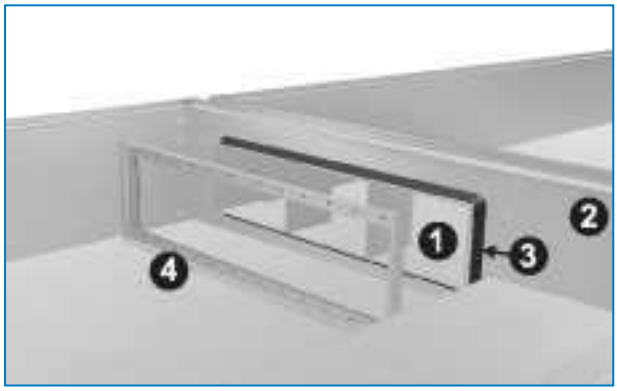

Installation of Back-up ring

1. Flume box
2. Basin wall Cell#2
3. Butyl sealer tape 25x8 mm
4. Back-up ring

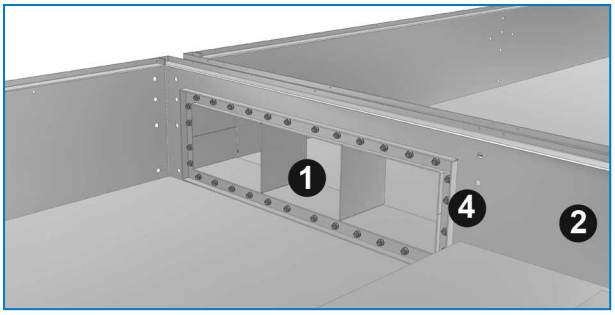

Bolting of Back-up ring

1. Flume box
2. Basin wall Cell#2
3. (not shown) Butyl sealer tape
4. Back-up ring

Flume boxes furnished with units constructed with stainless steel basins are assembled with stainless steel bolts, washers and nuts in lieu of self-tapping screws.

POSITIVE CLOSURE PLATE INSTALLATION

The optional positive closure plate and gasket can be furnished on multi-cell units to allow individual cells to be isolated for cleaning and routine maintenance. The plate and gasket ships loose inside the basin.
To install the positive closure plate follow the below instructions:

1. Remove tappers or bolts from the positions indicated in the below figure.

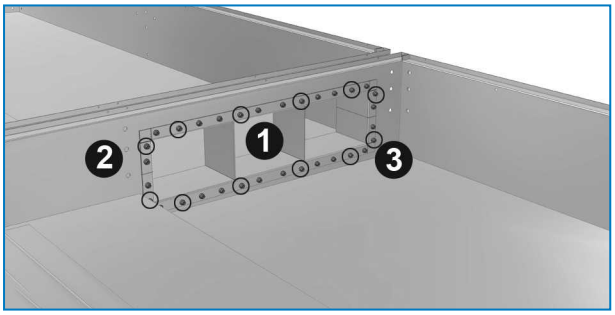

Remove indicated tappers/bolts befor installation of Positive Closure Plate.

1. Flume box
2. Basin wall Cell #1
3. Tappers/bolts to be removed for installation of positive closure plate.

2. Position the neoprene gasket and positive closure plate over the bolts of the flume box and fasten with the previously removed tappers/bolts.

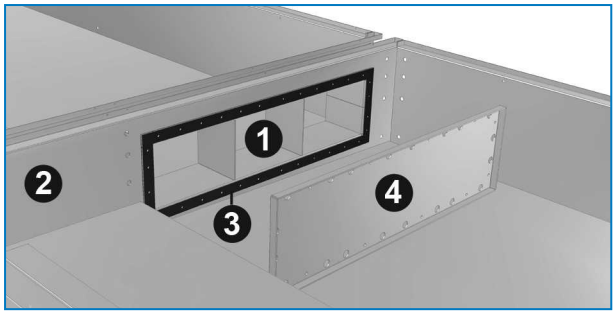

Positive closure plate gasket

1. Flume box
2. Basin wall Cell #1
3. Gasket
4. Positive closure plate

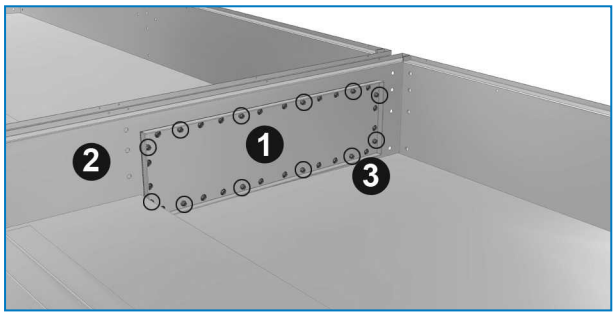

Re-bolting of Positive Closure Plate

1. Positive closure plate
2. Basin wall Cell #1
3. Tappers/Bolts to be re-installed for fastening positive closure plate

WATER BAFFLE INSTALLATION

For multi-cell Cooling Towers, water baffles join the air louver sections to prevent leaks. To install the water baffles, follow the below steps:

1. Slide lower water baffle into place.

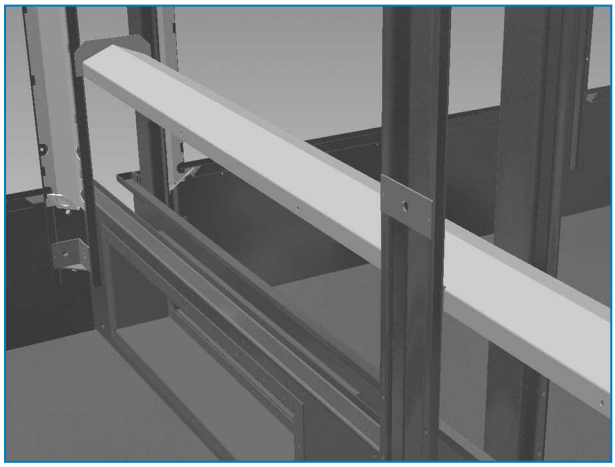

Water Baffle Installation – Step 1

2. Install left and right side water baffles by first aligning top notches.

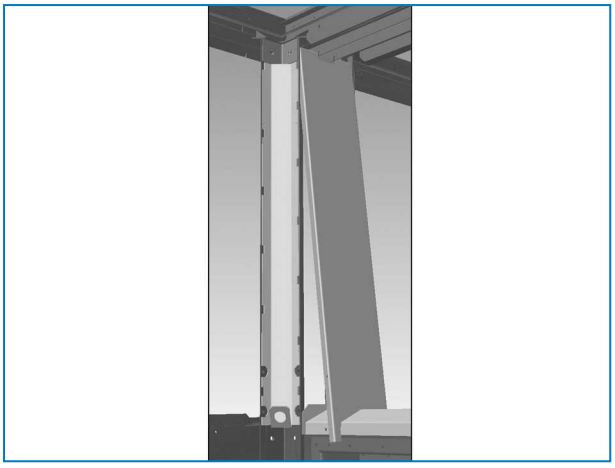

Water Baffle Installation – Step 2

3. Then sliding bottom into place. Install 3/8" self-tapping screws in each hole provided (without the use of any sealer).

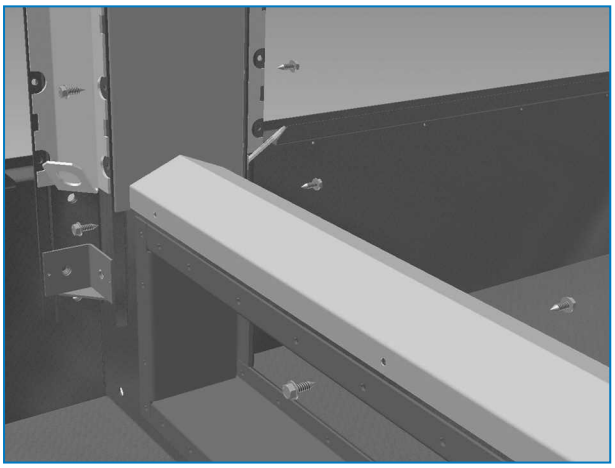

Water Baffle Installation – Step 3

4 PTE
OPTIONAL ACCESSORIES ASSEMBLY

General

1. All required installation instructions for optional accessories are stored in the wooden no nail crate / plastic container which is placed in the lower section. See "Inspection Before Rigging" on page 1 - picture "Hardware Location".
2. The platform, ladder and railing is packed on a separate skid. The assembly hardware is packed in a plastic container and strapped to the platform, ladder or railing itself.

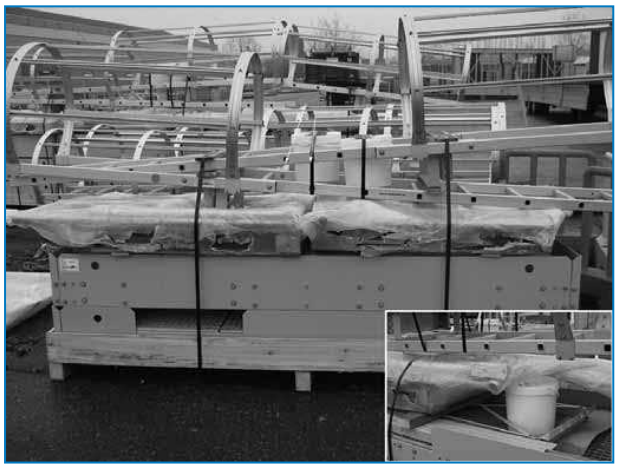

Hardware Location for platform, ladder & railing

Discharge Attenuator

1. Position discharge attenuator on fan cowl of mechanical section by aligning the fan deck holes with the slotted discharge attenuator bracket holes.
2. Fasten discharge attenuator brackets to fan deck of mechanical section with self-tapping screws.

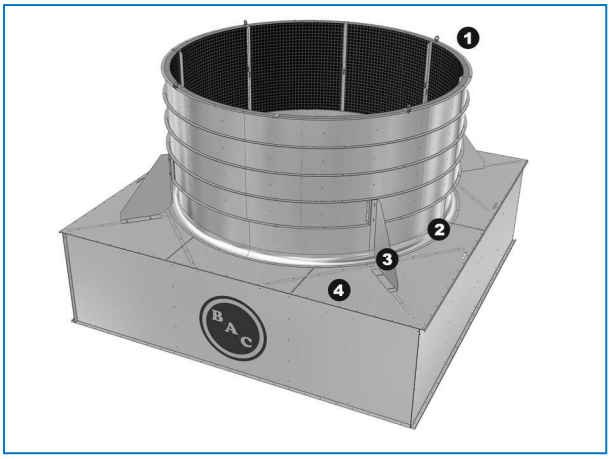

Discharge Attenuator

1. Discharge Attenuator
2. Fan Cowl Mechanical Section
3. Discharge Attenuator Bracket
4. Fan Deck Mechanical Section

Clean Out Port

Due to transport width limits, the cover flanges of the clean out port are mounted with flanges towards the inside (1). On site, the cover can be placed with flanges to the outside for easy access to hardware (2).

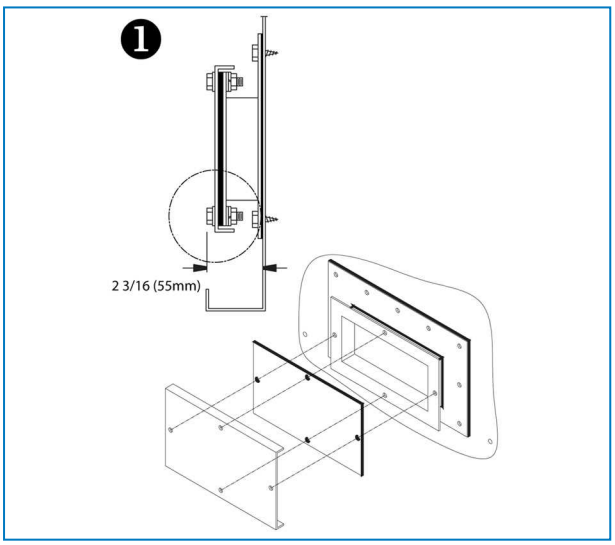

Clean out port cover mounted for transport

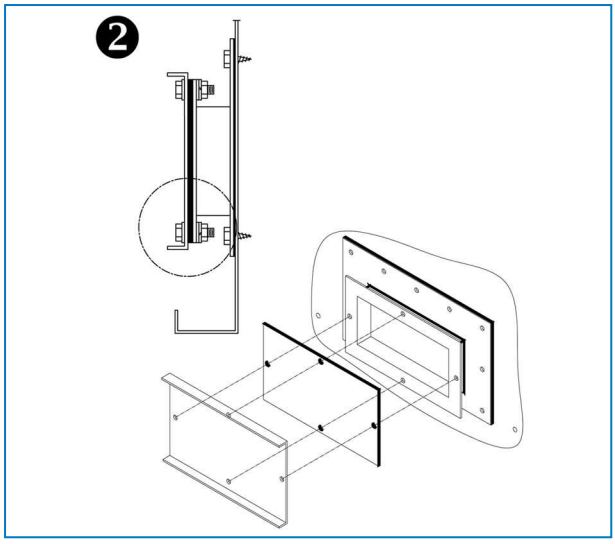

Final installation of clean out port cover

Installation of the Optional Side Outlet Depressed Sump Box

The optional "side outlet depressed sump box" can be furnished so that the unit water outlet connection can be piped from underneath the unit in four possible directions, each 90° apart. The connection is a bolt circle to accommodate a DIN PN10 flat faced flange with a full face gasket.
To install the side outlet depressed sump box follow steps 1 through 3 below.

1. Wipe the edges around the opening in the tower basin to remove any dirt or moisture that have accumulated during shipment. Apply a layer of butyl sealer tape around the opening in the basin over the centreline of the holes. Do not stretch the sealer too thinly or overlap at the corners. When it is necessary to splice the sealer, be sure to press the two ends together to form a continuous strip. Apply a second layer of sealer tape over the first layer following the same procedure. See Figure below.
2. Insert the sump box assembly into the opening in the tower basin and attach it to the basin with 8 x 25 mm bolt and nuts, flatwashers, and lockwashers as shown in the Figure below.
3. Place the sump strainer over the opening.

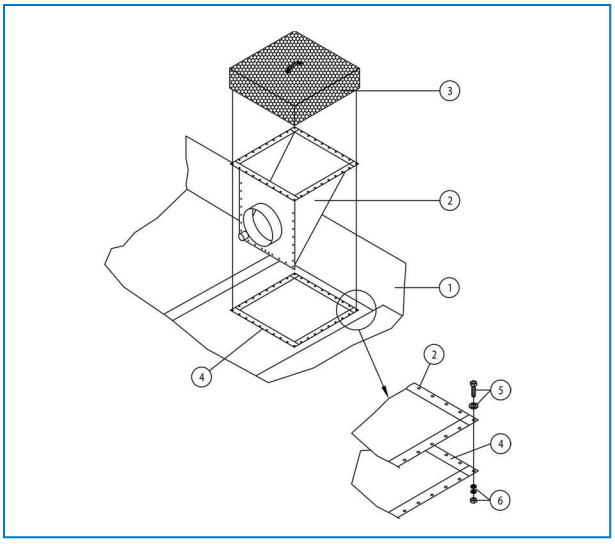

Installation of the Optional Side Outlet Depressed Sump box

1. Cold Water Basin
2. Side Outlet Depressed Sump Box
3. Sump Strainer
4. Sealer
5. 8 mm Bolt & Flatwasher
6. Lockwasher & 8 mm Nut

Optional Bottom Connection

To install the optional bottom connection, follow the instructions according to the following figure(s).

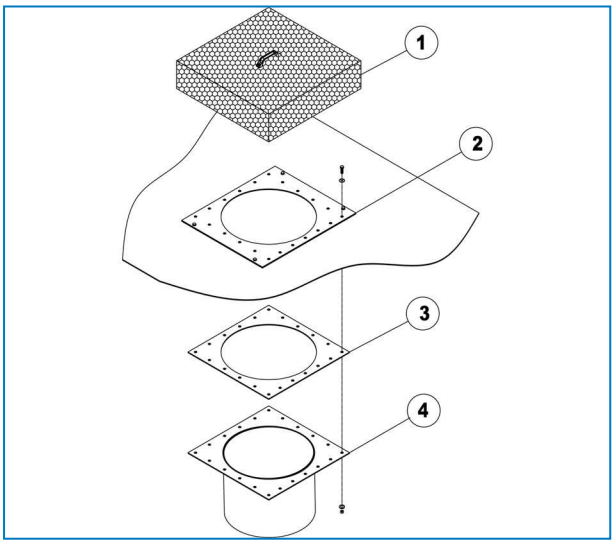

Installation of Optional Water Outlet Connection in Bottom

1. Sump Strainer
2. Back-up Plate
3. Rubber Gasket
4. Water-out Connection

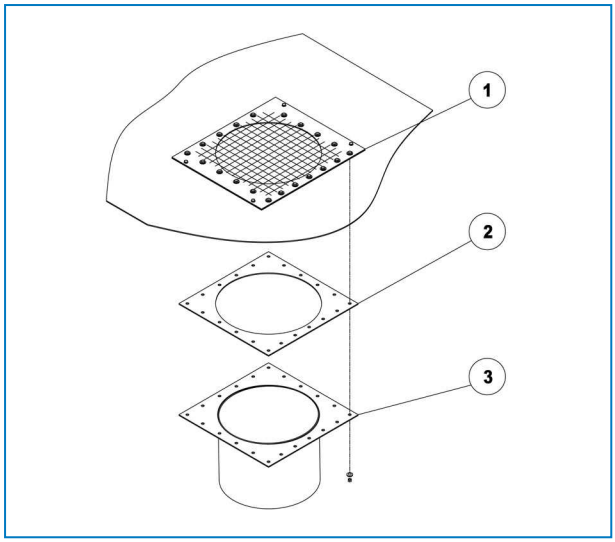

Installation of Optional Remote Sump Connection in bottom

1. Back-up Plate with Screen
2. Rubber Gasket
3. Remote Sump Connection

5 PTE
INSPECTION PRIOR TO START-UP

General

Prior to start-up, the following services, which are described in detail in the Operating and Maintenance Manual (see Table "Recommended Maintenance and Monitoring Programme" on page 2) must be performed.
Proper start-up procedures and scheduled periodic maintenance will prolong the life of the equipment and ensure trouble-free performance for which the unit is designed.

6 PTE
FURTHER ASSISTANCE & INFORMATION

Balticare

BAC has established a specialized independent total care company called Balticare. The BAC Balticare offering involves all elements required to ensure a safe and efficient operation of your evaporative cooling products. From a full range of risk assessment to selective water treatment, training, testing, record keeping and annual system overview.
For more details, contact BAC Balticare at www.balticare.com or you can also contact your local BAC representative for further information and specific assistance at www.BaltimoreAircoil.eu.

More Information

REFERENCE LITERATURE

- Eurovent 9-5 (6) Recommended Code of Practice to keep your Cooling System efficient and safe. Eurovent/Cecomaf, 2002, 30p.
- Guide des Bonnes Pratiques, Legionella et Tours Aéroréfrigérantes. Ministères de l'Emploi et de la Solidarité, Ministère de l'Economie des Finances et de l'Industrie, Ministère de l'Environnement, Juin 2001, 54p.
- Voorkom Legionellose. Minsterie van de Vlaamse Gemeenschap. December 2002, 77p.
- Legionnaires' Disease. The Control of Legionella Bacteria in Water Systems. Health & Safety Commission. 2000, 62p.
- Hygienische Anforderungen an raumlufttechnische Anlagen. VDI 6022.

INTERESTING WEB SITES

- www.BaltimoreAircoil.eu
- www.Balticare.com
- www.eurovent-certification.com
- www.ewgli.org
- www.ashrae.org
- www.uniclima.org
- www.aicvf.org
- www.hse.gov.uk

COOLING TOWERS

CLOSED CIRCUIT COOLING TOWERS

ICE THERMAL STORAGE

EVAPORATIVE CONDENSERS

HYBRID PRODUCTS

PARTS & SERVICES

BLUE by nature
GREEN at heart

www.BaltimoreAircoil.eu

info@BaltimoreAircoil.eu

www.balticare.com

info@balticare.com

Please refer to our website for local contact details.

Industriepark - Zone A, B-2220 Heist-op-den-Berg, Belgium

© **Baltimore Aircoil International nv**