Polairis

Refrigerant condensers

Key benefits

- Extremely reliable
- Energy efficient
- Minimal maintenance and easy inspection

POLAIRIS

Polairis characteristics

- Counter flow, radial fan, forced draft
- PED 2014/68/EU coil design

Capacity range

850 - 1890 kW
(for single cell models, nominal R717 kW's)

Typical applications

- Industrial refrigeration applications with focus on reliability, energy efficiency and minimal maintenance
- Tight enclosures and sound critical installations
- Dry operation in winter time

This file has been generated from the BAC website on: 01/07/2021
For more up to date information, visit: https://www.baltimoreaircoil.eu/en/products/Polairis

Extremely reliable

- The Polairis™ evaporative condenser's design incorporates all **experience** BAC acquired over the last decades with thousands of VXC units installed globally since 1978.
- Fan drive systems are located inside the unit, in the **dry air,** preventing condensation and eliminating corrosion issues and premature failures.
- Direct driven fans **eliminate potential mechanical failures**.
- Multiple, individually driven fans guarantee **redundancy**.
- **Baltibond hybrid coating** for maximum equipment life, with corrosion resistance equivalent to SST 304L.
- **Dry operation** possible.

Energy efficient

- Evaporative condensers yield the lowest condensing temperatures and hereby **minimize the system energy consumption.**
- Up to **50% savings** with the energy efficient radial fans, compared to standard centrifugal fans.
- EC motors have superior efficiency that exceeds the IE4 requirements. Integrated electronics of EC motors allow for **variable speed control** at a significantly **reduced power consumption** compared to AC motors with VFD.

Minimal maintenance and easy to inspect

- Direct driven fans require **no maintenance** at all.
- **The** DiamondClear™ Design* offers a continuous self-cleaning operation. The **need for maintenance is minimized** by using fully sloping surfaces, a constant impact of falling spray water and high water velocities.
- Collection basin covers only a fraction of the unit footprint, which makes it subject to higher turbulences. Together with the significantly lower volume (25% reduction versus conventional evaporative condensers), this **reduces the chemical usage and need for cleaning**.
- **Unmatched accessibility** to the basin, drives and fans in the dry section, via the mansized access door at ground level.
- Water distribution system is **easily accessible** from outside.
- Baltibond hybrid coating for a smooth surface finish that **facilitates internal cleaning**.

Superb hygiene

- **The** DiamondClear™ Design* offers a **continuous self-cleaning operation.** During standstill the sloping surfaces fully drain, avoiding stagnant water and the risk of sedimenation of impurities.
- A completely encased collection basin eliminates any sunlight ingress, **preventing biological growth**.
- Baltibond hybrid coating for a smooth surface finish that **reduces biofilm development**.
- The floor is fully sloped towards the drain - also in the dry section - for **easy cleaning**.
- Water treatment system connections are provided as standard.
- The access door is located in the dry area, **eliminating any leakage risk**.

This file has been generated from the BAC website on: 01/07/2021
For more up to date information, visit: https://www.baltimoreaircoil.eu/en/products/Polairis

Optimized for transport and easy installation

- **Installations costs are reduced** since units are shipped in 2 factory-built sections with a rigid base frame that guarantees squareness for easy on-site assembly.
- **Minimal freight costs** with 2,4 m wide units that fit into standard trucks.
- Fans are prewired to a terminal box to avoid time-consuming on-site wiring. Integrated electronics of EC motors eliminate the need for external VFD's, electronic filters and shielded cables.
- Single side air intake allows for i**nstallation in confined spaces and next to solid walls.**
- Pressure capability of fans allows indoor installation with ductwork.
- Silent radial fans reduce the need for installation of sound attenuation.

Ultra silent

- **Silent radial fans** are standard.
- Single side air inlet allows directing the quiet unit rear towards **noise sensitive areas**.
- Sound attenuation is available for the most **stringent sound requirements**.

* patent pending

Interested in the Polairis condenser for your industrial refrigeration application? Contact your local BAC representative for more information.

Downloads

- Polairis evaporative condenser
- Operating and Maintenance PLC2
- Rigging and Installation PLC2
- Spare Parts for PLC
- Retrofit Opportunities for PLC
- POLAIRIS PLC

This file has been generated from the BAC website on: 01/07/2021
For more up to date information, visit: https://www.baltimoreaircoil.eu/en/products/Polairis

Principle of operation

Refrigerant condensers

Principle of operation

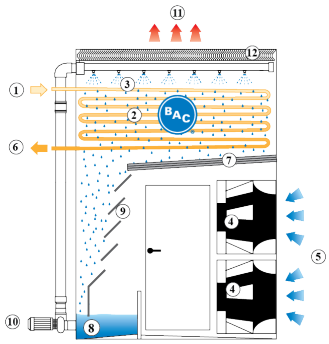

Refrigerant vapour (1) circulates through an **evaporative condensing coil (2)**, which is continuously wetted by the **spray system (3)** installed at the top of the condenser. At the same time the **direct driven radial fans (4)**, located at the bottom of the unit, blow ambient **air (5)** upwards through the condenser.
During operation, heat is transferred from the refrigerant to the water, and then to the atmosphere as a portion of the water that evaporates. The condensed vapour then **exits the unit (6)**. The remaining spray water that falls on the **sloping channels (7)** continuously flows into the **sloping sump (8)**, where the water is collected. **Access louvers (9)** prevent water splash-out to the dry section. The spray water **pump (10)** recirculates the water up to the water spray system. The warm saturated **air (11)** leaves the condenser through the drift **eliminators (12)**, which remove water droplets from the air.

Interested in the Polairis condenser? Contact your local BAC representative for more information.

This file has been generated from the BAC website on: 01/07/2021
For more up to date information, visit: https://www.baltimoreaircoil.eu/en/products/Polairis-principle-of-operation

Construction details

Refrigerant condensers

Construction details

1. Material options

- The unique Baltibond hybrid coating **is standard for maximum equipment life.** This hybrid polymer coating is applied before assembly to all hot-dip galvanized steel components of the unit.
- Optional **stainless steel** panels and structural elements of type 304L or 316L for extreme applications.
- Or the economical alternative: a **water-contact stainless steel cold water basin**. Its key components and the basin itself are stainless steel. The rest is protected with the Baltibond hybrid coating.

This file has been generated from the BAC website on: 01/07/2021
For more up to date information, visit: https://www.baltimoreaircoil.eu/en/products/Polairis-construction-details

2. Heat transfer media

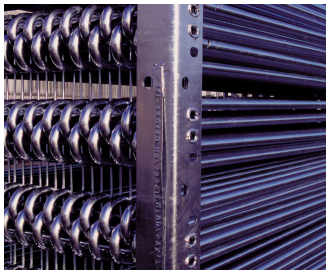

- Our heat transfer media is a **condensing coil**. Its thermal perfomance is proven during comprehensive lab **thermal performance tests,** and it offers you unrivalled system efficiency.
- The coil is constructed of continuous length prime surface steel, hot-dip galvanized after fabrication. Designed for maximum 23 bar operating pressure according to PED. Pneumatically tested at 34 bar.

- All hot dip galvanized and stainless steel coils are delivered with BAC's **Internal Coil Corrosion Protection**, to ensure an optimal internal corrosion protection and guaranteed quality.

Try our Polairis coil options:

- **Extended surface coils** with selected rows, finned at 3 to 5 fins per inch and hot-dip galvanized after fabrication, for dry operation during winter time.
- **Multiple circuit coils (split coils)** for your halo carbon refrigerants, maintaining individual compressor systems. Or use it for compressor jacket water or glycol cooling.
- **Stainless steel coils** are in type 304L or 316L.
- **High pressure coils** are designed for 28 bar operating pressure and pneumatically tested for 40 bar. Hot-dip galvanized after fabrication.

All coils are designed for low pressure drop with sloping tubes for free drainage of fluid.

This file has been generated from the BAC website on: 01/07/2021
For more up to date information, visit: https://www.baltimoreaircoil.eu/en/products/Polairis-construction-details

3. Air movement system

- The air movement system consists of **multiple, direct driven radial fans** made of aluminum, mounted on **EC motors with integrated control electronics**. They are completely **maintenance free** and guarantee **redundancy.**
- Air guiding channels installed above the fans allow a direct, vertical and **uniform air distribution** over the entire footprint of the condensing coil for **optimal heat transfer**.
- EC motors have an efficiency level that significantly **exceeds efficiency class IE4** and enable **speed control without an additional variable frequency drive** and shielded cables.
- The EC motors are wired to an IP66 terminal box, to avoid time-consuming on-site wiring.
- **Drift eliminators** come in UV-resistant plastic, which will not rot, decay or decompose and their performance is tested and **certified by Eurovent**. They are assembled in **easily handled and removable sections**, for easy inspection of the water distribution sytem.

- Steel drift eliminators, protected with the unique Baltibond hybrid coating for optimal corrosion protection, are also available for specific applications.

4. Water distribution system

These consist of:

- **Spray branches** with wide non-clog plastic **nozzles**, secured by rubber **grommets**. You can easily remove, clean and flush both nozzles and spray branches from outside the unit.

- A water collection system with:

  - Sloping channels that are continuously cleaned through direct impact of falling spray water, minimizing the need for maintenance

  - A sloping and free draining cold water basin with minimal surface and volume, which makes it subject to high turbulences during operation, thereby reducing the need for cleaning and chemical usage.

This file has been generated from the BAC website on: 01/07/2021
For more up to date information, visit: https://www.baltimoreaircoil.eu/en/products/Polairis-construction-details

This file has been generated from the BAC website on: 01/07/2021
For more up to date information, visit: https://www.baltimoreaircoil.eu/en/products/Polairis-construction-details

Options and accessories

Refrigerant condensers

Options and accessories

Below is a listing of the main Polairis options and accessories. If your required option or accessory is not listed, look no further than your local BAC representative.

Sound attenuation

Reducing noise at air intake and discharge points brings us closer to silent cooling equipment.

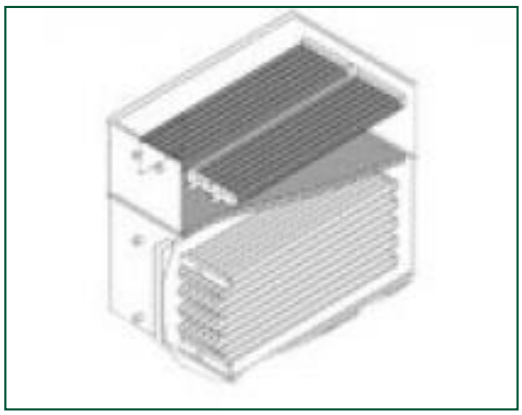

Desuperheater

Boost capacity and reduce plume of ammonia reciprocating compressor systems with a desuperheater**.**

This file has been generated from the BAC website on: 01/07/2021
For more up to date information, visit: https://www.baltimoreaircoil.eu/en/products/Polairis-options-accessories

Remote sump connection

The best way to **prevent a sump freezing** is to use the auxiliary remote variety within a heated area. Shutting off the circulating pump allows all the water in the water distribution, as well as that in suspension and the sump to drain freely to the auxiliary sump.

Basin heater package

Thanks to our factory-installed heaters, the water stays at 4°C and **never freezes** , even during equipments downtime and however cold it gets outside.

Electric water level control package

For perfectly precise water level control, replace the standard mechanical valve with our electrical water level controller.

Platforms

To inspect and maintain from the top of the unit more **easily** and **safely**, platforms can be installed.

This file has been generated from the BAC website on: 01/07/2021
For more up to date information, visit: https://www.baltimoreaircoil.eu/en/products/Polairis-options-accessories

Ladder, safety cage and handrail

A ladder, safety cage and handrails **all facilitate access to the top of the unit** and safe inspection of your condenser.

Discharge hood

Discharge hoods **reduce the risk of re-circulation** in tight enclosures by increasing discharge air velocity, and can be used to elevate the unit discharge above adjacent walls to comply with layout guidelines.

Standby pump

Install a standby **reserve spray pump** as failure backup!

This file has been generated from the BAC website on: 01/07/2021
For more up to date information, visit: https://www.baltimoreaircoil.eu/en/products/Polairis-options-accessories

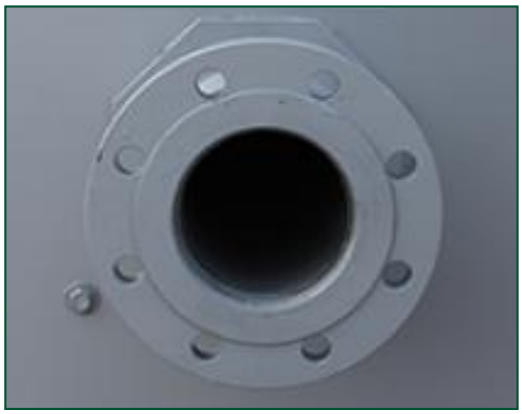

Flanges

Flanges facilitate **piping connections** on-site.

Water treatment equipment

Devices to control water treatment are needed to ensure proper **condenser water care**. Not only does this help protect the components, controlling corrosion, scaling and fouling, it also avoids the proliferation of harmful bacteria, including **legionella**, in the recirculating water.

Filter

Separators and media filters efficiently **remove suspended solids** in the recirculating water, reducing system cleaning costs and optimizing water treatment results. Filtration helps you keep the recirculating water clean.

Clean out port

Clean out port **makes it easy to eliminate silt and sludge** from the condenser basin when cleaning and flushing the sump.

This file has been generated from the BAC website on: 01/07/2021
For more up to date information, visit: https://www.baltimoreaircoil.eu/en/products/Polairis-options-accessories

Steel drift eliminators

Steel drift eliminators are more **robust** than plastic alternatives.

This file has been generated from the BAC website on: 01/07/2021
For more up to date information, visit: https://www.baltimoreaircoil.eu/en/products/Polairis-options-accessories

Special needs?

Refrigerant condensers

Special needs?

Our ongoing R&D investment helps BAC offer you a complete set of solutions **for Polairis evaporative condensers that meet your needs**. Plus, we also cater for extra requirements such as:

Plume control

Tap into abundant BAC plume control experience. For the Polairis line, we offer desuperheaters with **reduced plume and extended dry operation periods.**
Check out our BAC plume visualization software for insight into **how your cooling equipment will plume** before installation. Helping you choose the best and most effective plume abatement solution.

Water savings

You need water for evaporative cooling. At BAC, however, we offer acclaimed and advanced water saving technologies. Helping in this aim are:

- Electric water level control package
- Water treatment equipment
- Desuperheater

This file has been generated from the BAC website on: 01/07/2021
For more up to date information, visit: https://www.baltimoreaircoil.eu/en/products/Polairis-special-needs

Enhanced hygiene and water care

Water circulates in evaporative condensers and it is important to avoid excessive accumulation of dissolved solids. The following options help keep your condenser clean:

- Remote sump connection
- Water treatment equipment
- Clean out port
- Filters

To control biological growth and scale formation, the water quality of the circulated water should be checked regularly. Water quality guidelines can be found in the Knowledge center of the website.

Year-round reliable operation

Inspect and maintain your condenser and protect it against extreme weather for year-round reliability. The options below help keep your condenser running smoothly and reliably and facilitate maintenance.

- Remote sump connection
- Water treatment equipment
- Clean out port
- Filters
- Electric water level control package
- Desuperheater

Do you too want to benefit from the above solutions? Contact your local BAC representative for more information.

This file has been generated from the BAC website on: 01/07/2021
For more up to date information, visit: https://www.baltimoreaircoil.eu/en/products/Polairis-special-needs

PLC2 xxx-0812E-K

Refrigerant condensers

Engineering data

REMARK: Do not use for construction. Refer to factory certified dimensions & weights. This page includes data current at time of publication, which should be reconfirmed at the time of purchase. In the interest of product improvement, specifications, weights and dimensions are subject to change without notice.

General notes

1. Standard refrigerant in- and outlet connection sizes are ND100. Consult your local BAC Balticare representative for locations. Refrigerant connections are closed and coils are filled with an inert gas.
2. Unit height is indicative. For precise value refer to certified print.
3. Shipping/operating weights indicated are for units without accessories such as sound attenuators, discharge hoods, etc. Consult factory certified prints to obtain weight additions and the heaviest section to be lifted. Operating weights shown in the tables is based on total unit weight, weight of refrigerant operating charge and basin filled to overflow level.
4. Drawings show the standard right hand arrangement (air inlet side on the right when facing the connection end). Left hand arrangement can be supplied upon request.

Last update: 01/07/2021

PLC2 xxx-0812E-K

This file has been generated from the BAC website on: 01/07/2021
For more up to date information, visit: https://www.baltimoreaircoil.eu/en/products/PLC-xxx-0812E-K

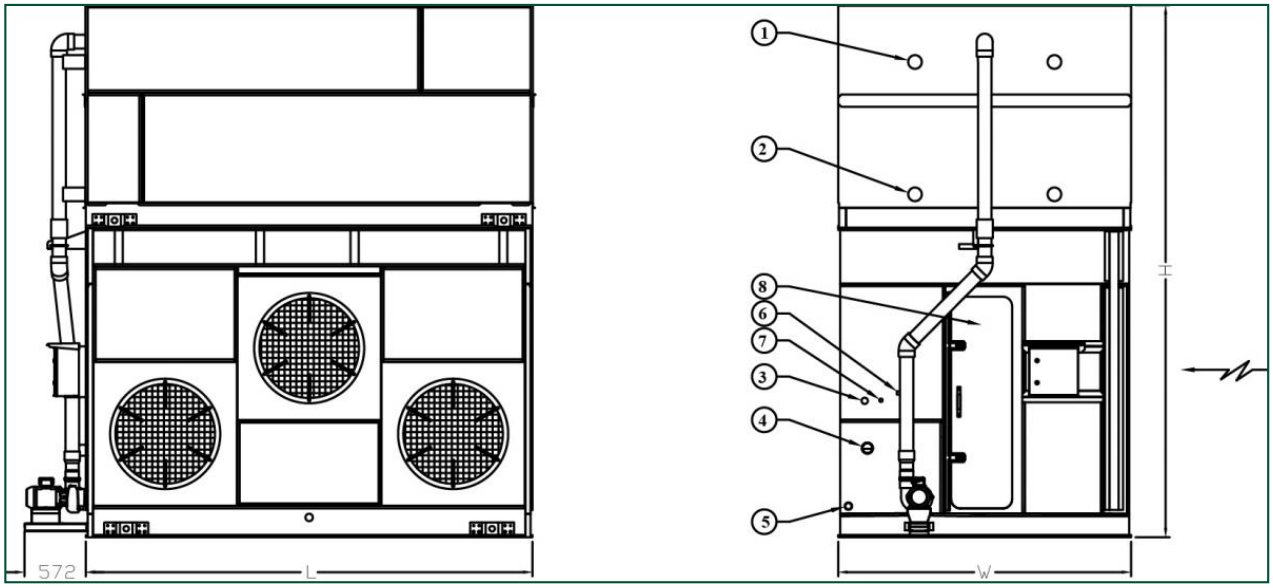

1. Refrigerant in ND100; 2. Refrigerant out ND100; 3. Make up ND40; 4. Overflow ND80; 5. Drain ND50; 6. Bleed ND25; 7. Treated Water In ND20; 8. Access door.

This file has been generated from the BAC website on: 01/07/2021
For more up to date information, visit: https://www.baltimoreaircoil.eu/en/products/PLC-xxx-0812E-K

Model	Weights (kg)			Dimensions (mm)			Air Flow (m^3/s)	Fan Motor (kW)	Water Flow (l/s)	Pump Motor (kW)	R717 charge (kg)
	Oper. Weight (kg)	Ship. Weight(kg)	Heaviest Section (kg)	L	W	H					
PLC2 0248-0 812E-K	6141	4786	2550	3651	2469	4353	31.65	(3x) 7.0	21.6	(1x) 2.2	100.0
PLC2 0276-0 812E-K	6682	5296	3060	3651	2469	4353	30.23	(3x) 7.0	21.6	(1x) 2.2	132.0
PLC2 0305-0 812E-K	7350	5932	3696	3651	2469	4734	28.81	(3x) 7.0	21.6	(1x) 2.2	164.0
PLC2 0330-0 812E-K	7892	6442	4206	3651	2469	4734	27.4	(3x) 7.0	21.6	(1x) 2.2	196.0

This file has been generated from the BAC website on: 01/07/2021
For more up to date information, visit: https://www.baltimoreaircoil.eu/en/products/PLC-xxx-0812E-K

PLC2 xxx-0818E-K

Refrigerant condensers

Engineering data

REMARK: Do not use for construction. Refer to factory certified dimensions & weights. This page includes data current at time of publication, which should be reconfirmed at the time of purchase. In the interest of product improvement, specifications, weights and dimensions are subject to change without notice.

General notes

1. Standard refrigerant in- and outlet connection sizes are ND100. Consult your local BAC Balticare representative for locations. Refrigerant connections are closed and coils are filled with an inert gas.
2. Unit height is indicative. For precise value refer to certified print.
3. Shipping/operating weights indicated are for units without accessories such as sound attenuators, discharge hoods, etc. Consult factory certified prints to obtain weight additions and the heaviest section to be lifted. Operating weights shown in the tables is based on total unit weight, weight of refrigerant operating charge and basin filled to overflow level.
4. Drawings show the standard right hand arrangement (air inlet side on the right when facing the connection end). Left hand arrangement can be supplied upon request.

Last update: 01/07/2021

PLC2 xxx-0818E-K

This file has been generated from the BAC website on: 01/07/2021
For more up to date information, visit: https://www.baltimoreaircoil.eu/en/products/PLC-xxx-0818E-K

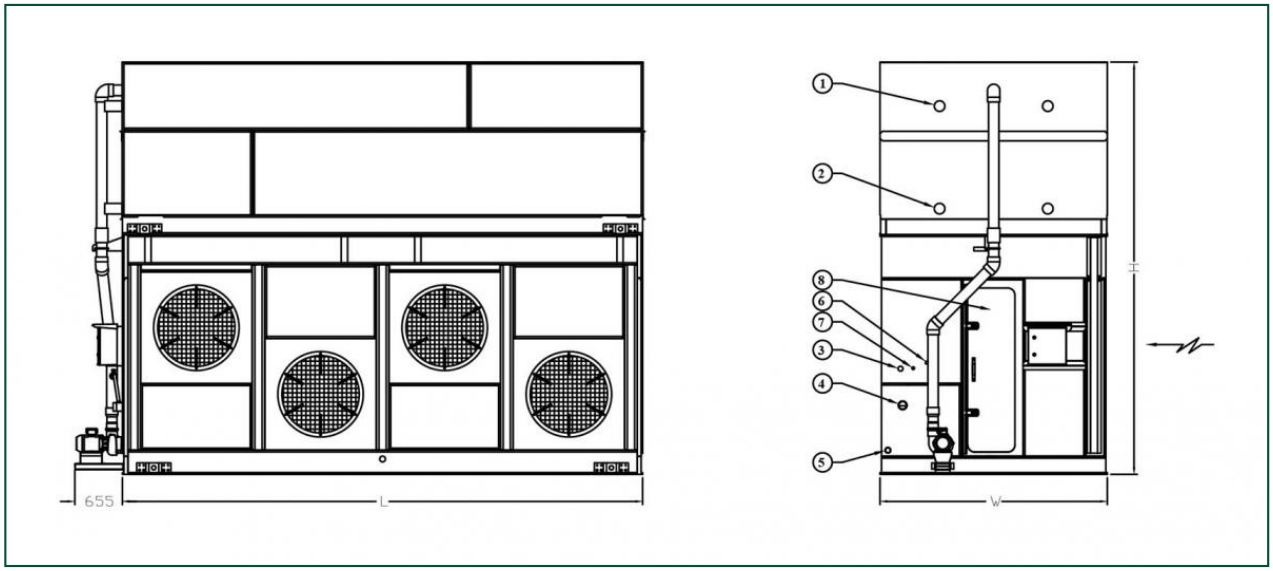

1. Refrigerant in ND100; 2. Refrigerant out ND100; 3. Make up ND40; 4. Overflow ND80; 5. Drain ND50; 6. Bleed ND25; 7. Treated water in ND20; 8. Access door.

This file has been generated from the BAC website on: 01/07/2021
For more up to date information, visit: https://www.baltimoreaircoil.eu/en/products/PLC-xxx-0818E-K

Model	Weights (kg)			Dimensions (mm)			Air Flow (m^3/s)	Fan Motor (kW)	Water Flow (l/s)	Pump Motor (kW)	R717 charge (kg)
	Oper. Weight (kg)	Ship. Weight(kg)	Heaviest Section (kg)	L	W	H					
PLC2 0350-0 818E-K	8982	6930	3644	5480	2469	4353	44.92	(4x) 7.0	30.6	(1x) 4.0	150.0
PLC2 0392-0 818E-K	9797	7697	4411	5480	2469	4353	43.03	(4x) 7.0	30.6	(1x) 4.0	198.0
PLC2 0434-0 818E-K	10774	8626	5340	5480	2469	4734	41.14	(4x) 7.0	30.6	(1x) 4.0	246.0
PLC2 0458-0 818E-K	11588	9392	6106	5480	2469	4734	39.25	(4x) 7.0	30.6	(1x) 4.0	294.0

This file has been generated from the BAC website on: 01/07/2021
For more up to date information, visit: https://www.baltimoreaircoil.eu/en/products/PLC-xxx-0818E-K

Sound attenuation

Refrigerant condensers

Engineering data

REMARK: Do not use for construction. Refer to factory certified dimensions & weights. This page includes data current at time of publication, which should be reconfirmed at the time of purchase. In the interest of product improvement, specifications, weights and dimensions are subject to change without notice.

General notes

1. Standard refrigerant in- and outlet connection sizes are ND100. Consult your local BAC Balticare representative for locations. Refrigerant connections are closed and coils are filled with an inert gas.
2. Unit height is indicative. For precise value refer to certified print.
3. Shipping/operating weights indicated are for units without accessories such as sound attenuators, discharge hoods, etc. Consult factory certified prints to obtain weight additions and the heaviest section to be lifted. Operating weights shown in the tables is based on total unit weight, weight of refrigerant operating charge and basin filled to overflow level.
4. Drawings show the standard right hand arrangement (air inlet side on the right when facing the connection end). Left hand arrangement can be supplied upon request.

Last update: 01/07/2021

Sound attenuation

This file has been generated from the BAC website on: 01/07/2021
For more up to date information, visit: https://www.baltimoreaircoil.eu/en/products/polairis-sound

1. Access door.

This file has been generated from the BAC website on: 01/07/2021
For more up to date information, visit: https://www.baltimoreaircoil.eu/en/products/polairis-sound

Model	Unit + Atten # pieces shipped	# Access Doors		Dimensions (mm)					Weights (kg)			
		Discharge	Intake	W2	H1	W1	L1	L2	Intake	Solid Bottom	Discharge	Total
PLC XXXX-0812E-K	4	1	2	3639	2357	2394	3651	3651	537		670	1207
PLC XXXX-0818E-K	4	1	2	3639	2357	2394	5480	5480	805		951	1756

This file has been generated from the BAC website on: 01/07/2021
For more up to date information, visit: https://www.baltimoreaircoil.eu/en/products/polairis-sound