BALTIMORE
AIRCOIL COMPANY

TVC Adiabatic Condenser

OPERATING AND MAINTENANCE INSTRUCTIONS

Recommended maintenance and monitoring programme

Baltimore Aircoil Company equipment needs to be properly installed, operated and maintained. Documentation of the equipment used, including a drawing, technical data sheet and this manual should be kept on record. To achieve long, trouble-free and safe operation, it is necessary to establish an operating plan including a programme of regular inspection, monitoring and maintenance. All inspections, maintenance and monitoring actions should be recorded in a cooling system logbook. The operating and maintenance instructions published here can be used as a guide to achieve these goals.
In addition to establishing the operating plan and the cooling system logbook it is recommended to conduct a cooling system risk analysis, preferably by an independent third party.
For more specific recommendations on keeping your cooling system efficient and safe, contact your local BAC Balticare service provider or representative. Name, e-mail and phone number can be found on the website www.BACService.eu.

Checks and adjustments	Start-Up	Every month	Every 3 months	Every 6 months	Every start of adiabatic season, Spring
Adiabatic pre-cooler water flow	X		X		X
Level switches (optional)	X				X
Tighten electrical connections	X			X	X
Rotation of fan(s)	X				
Motor voltage and current	X			X	X
Unusual noise and/or vibration	X		X		X

Inspections and monitoring	Start-up	Every month	Every 3 months	Every 6 months	Every start of adiabatic season, Spring
General condition of the equipment	X		X		X
Adiabatic pre-cooling pads	X		X		X
Heat transfer coil	X			X	
Water distribution pipe	X			X	X
Float switch (ball can move freely)	X	X			X

Cleaning procedures	Start-up	Every month	Every 3 months	Every 6 months	Every start of adiabatic season, Spring
Adiabatic pre-cooling media	X		X		X
Adiabatic gutter system				X	X
Sump				X	X
Coil (remove dust)					X

Auxiliary equipment integrated in the cooling system may require additions to the table above. Contact suppliers for recommended actions and their required frequency.

Table of contents

OPERATING AND MAINTENANCE INSTRUCTIONS

1	**Construction details**	**4**
2	**General information**	**5**
	Operating conditions	5
	Connecting pipework	6
	Safety precautions	7
	Disposal requirements	8
	Non-walking surfaces	8
	Modifications by others	8
	Warranty	8
3	**Water care**	**9**
	About water care	9
	Biological control	11
	Chemical treatment	11
4	**Cold weather operations**	**12**
	About cold weather operation	12
	Protection against coil freezing	12
	Protection against pre-cooler freezing	12
	Protection of electrical components	12
5	**Operating instructions**	**13**
	TrilliumSeries Condensers with EC fans & factory installed control panel	13
	Control logic	13
	Electrical panels	13
	Operating instructions Digital Controller	14
	Monitoring of process information	14
6	**Maintenance procedure**	**15**
	Checks and adjustments	15
	Inspections and corrective actions	17
	Fan replacement	19
	Cleaning procedures	20
	Adiabatic pre-cooling media	24
7	**Comprehensive maintenance**	**26**
	About comprehensive maintenance	26
	Prolonged outdoor stay	26
8	**Further Assistance & Information**	**27**
	Assistance	27
	More information	27

1 TVC
CONSTRUCTION DETAILS

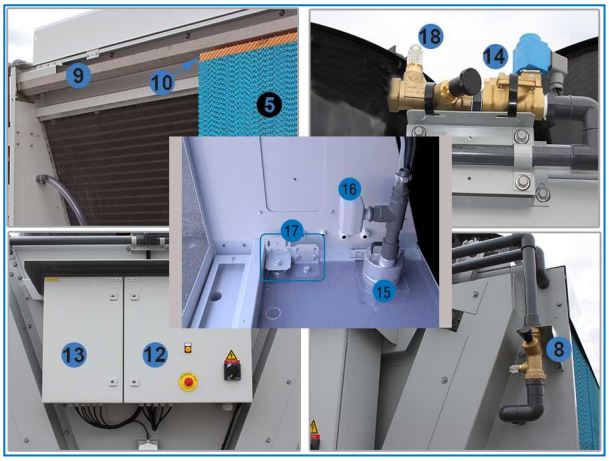

Details

1. Heat exchanger
2. Coil headers
3. Casing
4. Fans
5. Pre-cooler media
6. Pre-cooler drain valve
7. Pre-cooler drain
8. Pre-cooler flow valve/meter
9. Pre-cooler water distribution gutter
10. Pre-cooler water distribution pads
11. Ambient temperature sensor
12. Power panel
13. Control panel
14. Make-up
15. Recirculation pump (optional)
16. Flow switch (optional)
17. Level switch (optional)
18. Make-up flow balancing valve
19. Coil connections

Operating conditions

BAC cooling equipment is designed for the operating conditions specified below, which must not be exceeded during operation.

- **Wind Load**: For safe operation of unshielded equipment exposed to wind speeds above 120 km/h installed at a height above 30 m from the ground, contact your local BAC-Balticare representative.
- **Seismic Risk**: For safe operation of equipment installed in moderate and high hazard area's contact your local BAC-Balticare representative.

Ambient temperature at continuous full speed; full load operation ranges from -10°C to + 45°C. For cold climates, if optional thermostatically controlled heaters are employed, the temperature range can be extended from -40°C to + 45°C.

HEAT EXCHANGER COIL

- Design working pressure: 28 bar
- Maximum condensing temperature: 60°C
- Refrigerants circulated through the inside of the coils must be compatible with the coil construction material.

ADIABATIC PRE-COOLER OF TRILLIUMSERIES CONDENSER

- Design water supply pressure: 3-10 bar
- The water distributed on the adiabatic pre-coolers should be of potable supply.
- In case of non-treated water, the temperature should be kept below 20°C.

PURGE REQUIREMENTS

The installer of BAC condensers must ensure proper air purging of the system prior to operation.
Entrained air can obstruct free drainage of refrigerant and reduce condensing capacity, resulting in higher operating pressures than designed.
To verify absence of non condensables in the refrigeration system, follow the instructions in the BAC Application Handbook – EU Edition (https://www.baltimoreaircoil.eu/downloads/pdf-Application-Handbook-EU-Edition), Section "Condenser Engineering Guidelines".

CIRCULATED WATER QUALITY

The standard heat exchanger coils are made of black steel and are galvanized on the outside only. They are intended for application on closed, pressurized systems which are not open to the atmosphere in order to prevent internal corrosion of the coil and possible leaks.
The circulating water quality needs to remain within the following limits:

pH	7 - 10.5
Hardness (as CaCO3)	100 - 500 mg/l
Alkalinity (as CaCO3)	100 - 500 mg/l
Conductivity	< 3000 µS/cm
Chlorides	< 200 mg/l
Total suspended solids	< 10 mg/l
COD	< 50 ppm

Above values are general guidelines for pressurized closed systems closed systems with a leak rate lower than 15% of system volume per year. If the annual make-up of the closed system is greater than 15% yearly or if highly corrosive water such as water with very low hardness or alkalinity is used, it is recommended to consider alternative stainless steel material or implement a proper water treatment program to prevent steel corrosion.

Stainless steel coil are available to cool corrosive fluids or water and ethylene/propylene glycol solutions in systems open to the atmosphere. In case of stainless steel heat exchanger coils the circulating water quality needs to remain within the following limits:

	SST304L	SST316L
pH	6.5 - 10.5	6.5 - 10.5
Hardness (as CaCO3)	0 - 500 mg/l	0 - 500 mg/l
Alkalinity (as CaCO3)	0 - 500 mg/l	0 - 500 mg/l
Conductivity	< 3300 µS/cm	< 4000 µS/cm
Chlorides	< 250 mg/l	< 750 mg/l
Total suspended solids	< 10 mg/l	< 10 mg/l
COD	< 50 ppm	< 50 ppm

In all cases, regardless of the material of construction of the coil a competent water treatment company should be consulted for the specific water treatment to be applied, suitable for all the materials of construction used in the entire system.

Connecting pipework

All piping external to BAC cooling equipment must be supported separately.
In case the equipment is installed on vibration rails or springs, the piping must contain compensators to eliminate vibrations carried through the external pipework.
Suction pipe sizing should be done according to good practice, which may for larger flows require larger pipe diameters than the outlet connection. In such cases adapter pieces need to be installed.

Safety precautions

All electrical, mechanical and rotating machinery constitutes a potential hazard, particularly for those not familiar with its design, construction and operation. Accordingly, adequate safeguards (including use of protective enclosures where necessary) should be taken with this equipment both to safeguard the public (including minors) from injury and to prevent damage to the equipment, its associated system and the premises.
If there is doubt about safe and proper rigging, installation, operation or maintenance procedures, contact the equipment manufacturer or his representative for advice.
When working on operating equipment, be aware that some parts may have an elevated temperature. Any operations on elevated level have to be executed with extra care to prevent accidents.

CAUTION
Surface of coil/piping can be hot.

AUTHORIZED PERSONNEL

The operation, maintenance and repair of this equipment should be undertaken only by personnel authorized and qualified to do so. All such personnel should be thoroughly familiar with the equipment, the associated systems and controls and the procedures set forth in this and other relevant manuals. Proper care, personal protective equipment, procedures and tools must be used in handling, lifting, installing, operating, maintaining and repairing this equipment to prevent personal injury and/or property damage. Personnel must use personal protective equipment where necessary (gloves, ear plugs, etc...)

MECHANICAL SAFETY

Mechanical safety of the equipment is in accordance with the requirements of the EU machinery directive.
Depending upon site conditions it also may be necessary to install items such as bottom screens, ladders, safety cages, stairways, access platforms, handrails and toe boards for the safety and convenience of the authorized service and maintenance personnel.
At no time this equipment should be operated without all fan screens in place.
Since the equipment operates at variable speeds, steps must be taken to avoid operating at or near the installation's "critical speed".
For more information consult your local BAC Balticare representative.

ELECTRICAL SAFETY

All electrical components associated with this equipment should be installed with a lockable disconnect switch located within sight of the equipment.
In the event of multiple components, these can be installed after a single disconnect switch but multiple switches or a combination thereof are also allowed.
No service work should be performed on or near electrical components unless adequate safety measures are taken. These include, but are not limited to the following:

- Isolate the component electrically
- Lock the isolation switch in order to prevent unintentional restart
- Measure that no electrical voltage is present anymore
- If parts of the installation remain energized, make sure to properly demarcate these in order to avoid confusion

Fan motor terminals and connections may have residual voltage after unit shut-down. Wait five minutes after disconnecting the voltage at all poles before opening the fan motor terminal box.

LOCAL REGULATIONS

Installation and operation of cooling equipment may be subject to local regulations, such as establishment of risk analysis. Ensure regulatory requirements are consistently met.

Disposal requirements

Dismantling of the unit and treatment of refrigerants (if applicable), oil and other parts must be done with respect to the environment whilst protecting workers from potential risks related to exposure to harmful substances. National and regional legislation for material disposal and protection of workers should be taken into account with regard to:

- Appropriate handling of construction and maintenance materials when dismantling the unit. In particular when dealing with materials that contain harmful substances, such as asbestos or carcinogenic substances.
- Appropriate disposal of the construction and maintenance materials and components such as steel, plastics, refrigerants and waste water according to local and national requirements for waste management, recycling and disposal.

Non-walking surfaces

Access to and maintenance of any component needs to be performed in accordance with all local applicable laws and regulations. If the proper and required access means are not present, temporary structures need to be foreseen. Under no circumstance can one use parts of the unit, that are not designed as an access mean, unless measures can be taken to mitigate any risks that might occur from doing so.

Modifications by others

Whenever modifications or changes are made by others to the BAC equipment without written permission of BAC, the party who has done the modification becomes responsible for all consequences of this change and BAC declines all liability for the product.

Warranty

BAC will guarantee all products to be free from manufactured defects in materials and workmanship for a period of 24 months from the date of shipment. In the event of any such defect, BAC will repair or provide a replacement. For more details, please refer to the Limitation of Warranties applicable to and in effect at the time of the sale/purchase of these products. You can find these terms and conditions on the reverse side of your order acknowledgement form and your invoice.

3 TVC WATER CARE

About water care

The adiabatic pre-cooler of the unit has been designed as direct-water system, without water re-circulation, without pump. Therefore it is essential that the main cold-water supply connected to the adiabatic pre-cooler has adequate pressure and flow rate for the pre-cooler being installed.
The primary water treatment control method for the adiabatic pre-cooler is to provide sufficient water to the pre-cooler medium to keep it flushed. If sufficient water is not provided to completely wet and flush the entire pre-cooler medium surface, deposition will occur.

Many water related problems can be avoided if good system design and basic housekeeping practices are followed. However, water treatment chemicals should NOT be used INSTEAD of following these practices:

- Provide, good, even water distribution (See table: Minimum recommended adiabatic pre-cooler water flow rates)
- Clean distribution header on a regular basis
- Replace damaged or spent pre-cooler media

Refer to "Construction details" on page 4. Mains cold water is supplied to (6), and is fed to the water distribution system (9), via a flow valve/meter (8). The recommended mains water supply pressure is minimum 3 bar, and the flow valve/meter (8) needs to be adjusted at installation to feed a minimum water flow over the adiabatic pre-cooler (See table: "Minimum recommended adiabatic pre-cooler water flow rates")
The minimum water flow to be distributed over the adiabatic pre-cooler depends on:

- Climate conditions, i.e. evaporation rate at design conditions
- General water quality
- Water scaling tendency (practical scaling index)

The minimum water flow rates given in table "Minimum recommended adiabatic pre-cooler water flow rates", are valid for the following operating conditions:

- Maximum ambient temperature of 35 ºC at minimum relative humidity of 30 %.
- Minimum supply water quality (See table below "Minimum supply water quality").
- Practical scaling index of 5.5 – 8.0.

To control corrosion and scale, the water chemistry of the circulated water has to be kept within the water quality guidelines of the specific materials of construction used, as listed in the following table(s).

Water quality guidelines for adiabatic pre-cooler Frame	Baltibond®Hybrid Coating
Temperature	< 20 ºC
PH	6.5 – 9
Hardness as ($CaCO_3$)	30 – 500 mg/l
Alkaline as ($CaCO_3$)	< 500 mg/l
Total dissolved solids	< 1500 mg/l
Chlorides	< 200 mg/l
Sulfates	< 300 mg/l
Conductivity	1800 µS/cm
Bacteria Rate (CFU/ml, KBE/ml)	< 1000

Minimum supply water quality

For Ozone water treatment application:

- Stainless steel 316L execution is required.
- Ozone levels are to be maintained to 0.2 ppm ± 0.1 ppm for at least 90% of the time, with absolute maximum peaks of 0.5 ppm

Recommended adiabatic pre-cooler water flow rates

If any of the following happens:

- at ambient conditions exceeding the given maximum ambient conditions,
- with supply water quality data exceeding one or more of the concentration limits of above table "Minimum supply water quality",
- if the supply water has a Practical Scaling Index below 5.5,

Then:

- the water flow needs to be increased to higher levels to avoid rapid fouling and scaling of the pre-cooler medium. Contact your local BAC-Balticare representative for support.

Data for rapid calculations of Practical Scaling Index for adiabatic pre-cooler									
Conductivity (µS/cm) A		Temperature ºC B		Calcium hardness (PPM as $CaCO_3$) C		Total alkalinity (PPM as $CaCO_3$) D		Alkalinity (PPM as $CaCO_3$) pHeq	
50-300	0.1	10-13	2.3	10-15	0.70	10-15	1.10	50	7.0
301-1000	0.2	14-17	2.2	16-25	0.90	16-25	1.30	100	7.5
1001-3000	0.25	18-21	2.1	26-40	1.10	26-40	1.50	200	7.9
3001-5000	0.27	22-27	2.0	41-70	1.35	41-70	1.75	300	8.2
				71-100	1.55	71-100	1.90	400	8.4
				101-140	1.70	101-140	2.10	500	8.5
				141-200	1.85	141-200	2.25		
				201-250	1.95	201-250	2.35		
				251-300	2.05	251-300	2.45		
				301-350	2.12	301-350	2.52		
				351-400	2.18	351-400	2.58		
				401-450	2.24	401-450	2.63		
				451-500	2.28	451-500	2.68		

Calculation of Practical Scaling Index

Instructions:
1. Obtain values of A, B, C and D from above tables
2. pHs = (9.3 + A + B) – (C + D)
3. Practical Scaling Index = 2 pHs – pHeq
   - if Index is 6.0, water is stable
   - if Index is above 6.0, water is scale dissolving
   - if index is below 6.0, water is scale forming

With Practical Scaling Index below 5.5, minimum recommended water flow in table "Minimum water flow rates" needs to be increased, contact your local BAC-Balticare representative for support.

Biological control

The adiabatic pre-cooler and its controls have been designed to minimize the risk of uncontrolled growth of algae, slimes and other micro-organisms such as Legionella:
1. No standing water
2. Complete drying of the pre-cooling system after each adiabatic cycle
3. Complete draining of all water distribution piping installed on the unit after each adiabatic cycle

CAUTION

The owner of the equipment is responsible for draining of all water piping feeding the adiabatic pre-cooler to avoid stagnant water conditions.

4. Use of potable water supply at temperatures of 20 ºC or less, where Legionella is dormant
5. Aerosol free operation

When basic housekeeping practices are followed, and when the guidelines for operation and maintenance of this bulletin are followed, problems related to uncontrolled growth of micro-organisms will be avoided.

Chemical treatment

A biocide program for biological control can be implemented in conjunction with the maintenance program for increased operational safety. However, biological control should not be used in place of good housekeeping. The two most commonly available biocides are chlorine and bromide. These chemicals have widespread success in general application; however, caution should be practiced when using them in the adiabatic pre-cooling system. Continuous dosages of chlorine or bromide could delignify the cellulose fibres of the pre-cooler media, and degrade the stiffening agents.

RECOMMENDED CHLORINE / BROMIDE DOSAGES

Continuous Treatment: Not required when basic housekeeping practices are followed, and when the guidelines for operation and maintenance of this bulletin are followed.
Shock Treatment: 3.0 – 5.0 PPM Free Halogens. Not recommended more often than once per quarter.

4 TVC
COLD WEATHER OPERATIONS

About cold weather operation

BAC cooling equipment can be operated in sub freezing ambient conditions provided the proper measures are taken. Listed below are general guidelines which should be followed to minimize the possibility of freeze-up. As these guidelines may not include all aspects of the anticipated operation scheme, system designer and operator must thoroughly review the system, location of the equipment, controls and accessories to ensure reliable operation at all times.

Protection against coil freezing

On a standard unit, full coil drain of the heat exchangers is not possible and as such, this method cannot be relied upon to protect fluid coolers operating under ambient temperatures that could drop below freezing point, from damage to the coil.

Protection against pre-cooler freezing

The integrated controls automatically prevent adiabatic operation once the ambient temperature drops below 4°C. No extra attention to the unit itself is required. It is of course advisable to take the necessary precautions with regard to the piping towards the unit.

Protection of electrical components

The components inside the electrical panel are designed to operate in ambient temperatures down to -10°C. In case colder temperatures can be expected, the control panel needs to be equipped with a heating element in order to avoid the temperature inside the panel to drop below -10°C.

TrilliumSeries Condensers with EC fans & factory installed control panel

Control logic

The fan speed is controlled on the basis of the actual process fluid return temperature and the design return temperature, ensuring a minimum electrical consumption and noise levels.
The adiabatic pre-cooling will be activated and stopped on the basis of a pre-programmed logical combination of the fan speed and the ambient temperature (release set-point). Default settings will not activate adiabatic pre-cooling unless all fans are running at maximum permissible speed and the dry-to-adiabatic release set-point is reached.
The adiabatic control logic is pre-programmed and is ready for operation.
Depending on the actual size of the installation, the controller pre-programmed PI process parameters may need to be adjusted.

Electrical panels

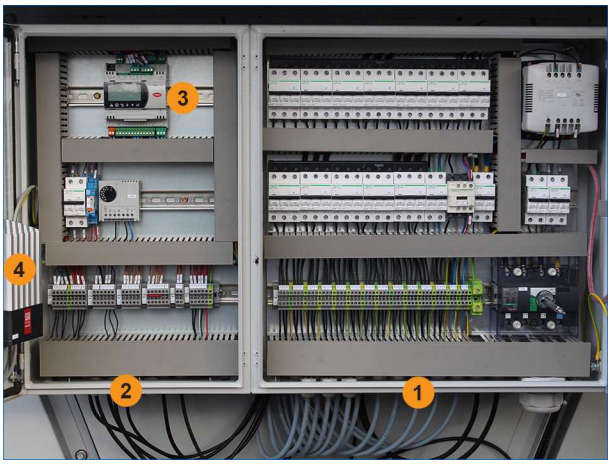

Electrical panel for unit with EC fans

1. Power panel
2. Control panel
3. Digital controller with LCD interface
4. Optional heater (required for ambient temperatures between - 10°C and - 40°C)

CONTROL PANEL

The control panel contains the digital controller and the optional thermostat.
At the outside of the control panel, the following components can be found:

- Emergency stop: Push to activate; rotate to de-activate.
- Reset button (restart after emergency stop).
- 24VAC power indicator light.

POWER PANEL

At the outside of the power panel, the following components can be found:

- ON/OFF switch

Operating instructions Digital Controller

There are different menu's:

- Main Loop Menu (readout unit status, temperatures, fan speed, etc...)
- Alarms (status of different alarms)
- User Menu (operational settings)
- Manufacturer Menu (not accessible)
- Clock
- System info
- Logger (alarm and warning history)
- Maintenance
- Working time (operating hours fans and adiabatic pre-cooling)
- Inputs/outputs

Please refer to the Software Instructions Manual (SI-TVC) and the units specific parameter settings in your submittal package.

CAUTION

Changing the controller's parameters may result in an undesired operation of the unit such as a 'hunting' phenomenon, premature activation of pre-cooling (hence increased water consumption) or in late pre-cooling activation resulting in fluid outlet temperatures exceeding the design temperature.

Monitoring of process information

DRY CONTACTS AT TERMINAL STRIP IN ELECTRICAL PANEL

- Input:
  - Run authorization (NO)
  - Free cooling (NO)
- Output:
  - General Alarm (NO+NC)
  - Warning (NO)
  - Run Indication (NO)

DIGITAL BUS SYSTEM

A bus connection from the digital controller for monitoring can be wired to the terminal strip. Depending on the required communication protocol, a different optional communications card can be installed in the controller.

Checks and adjustments

ADIABATIC PRE-COOLER WATER FLOW

A minimum water flow must be distributed over the adiabatic pre-cooler as per minimum water flow rates. (See table below "Minimum recommended adiabatic pre-cooler water flow rates").
The water flow will depend on the supply water pressure, and can be set with the 2 concentric hex screws on the water flow valve on the flow meter. First open the plastic cover plate of the water flow adjustment screw.

Water flow adjustment screw

Model	Number of fans	Recommended pre-cooler water flow per unit		
		Once Through	Recirculation	
			Make-up	Pump
TVC-EC-8022-*	4 fans	2x 7 l/min	1x 14 l/min	1x 30 l/min
TVC-EC-8023-*	6 fans	2x 11 l/min	1x 22 l/min	1x 40 l/min
TVC-EC-8024-*	8 fans	2x 14 l/min	1x 28 l/min	2x 30 l/min
TVC-EC-8025-*	10 fans	2x 18 l/min	1x 36 l/min	2x 35 l/min
TVC-EC-8026-*	12 fans	2x 22 l/min	1x 44 l/min	2x 40 l/min
TVC-EC-8027-*	14 fans	2x 25 l/min	1x 50 l/min	2x 50 l/min

Recommended adiabatic pre-cooler water flow rates

LEVEL SWITCHES

Level switches are only available for recirculation units.

Two industrial grade stainless steel float switches maintain the water level in the sump between a minimum and maximum level in order to make sure there is always enough water available to ensure a proper wetting of the pre-cooler pads.
Both switches are factory set at the correct level. This can be verified visually or with the help of a tool like a screw driver when the matching holes are properly aligned (see drawing below).

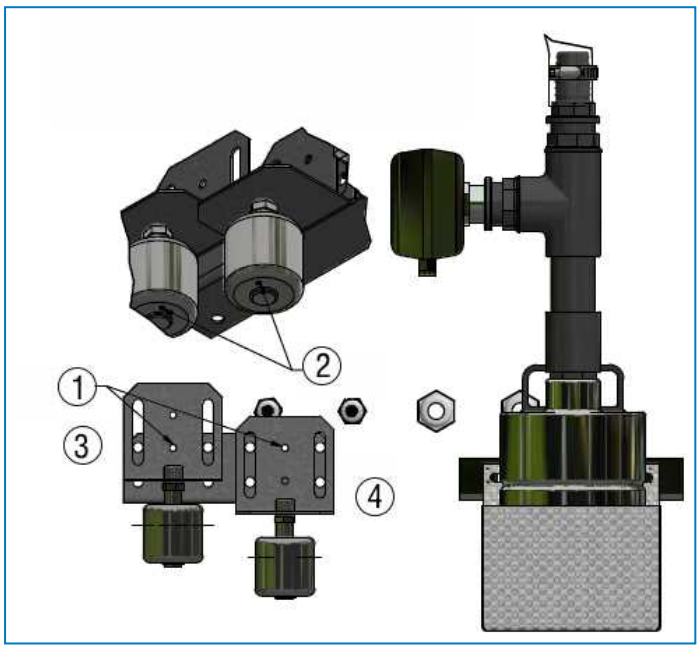

Measurements of the float switch construction

1. Matching holes
2. Witness mark
3. High level
4. Low level

Use a metal cylinder profile like a screwdriver to position high and low level float switch. Float switch operation can be reversed, for correct operation witness mark is at the bottom.

The minimum and maximum water level can be adjusted for site specific conditions by changing the vertical position of the float switches.

CAUTION

Changing the set points may lead to overflowing the basin, or damaging the pump(s).

Instructions to change the height:
1. Loosen the M8 bolts
2. Adjust the vertical position of the float switch to the desired height
3. Tighten the M8 bolts

ADIABATIC PRE-COOLER SET-POINT

The operation of the adiabatic pre-cooling sections is controlled by the digital controller.
The controller should limit the start and stop to maximum 1 per day per adiabatic pre-cooling side, this to increase the service life of the pre-cooler media. If the number of daily starts and stops exceeds 1 per day, it is recommended that the controller's set points are adjusted. The pre-cooler can be operated to allow a higher number of starts and stops which could reduce total annual water consumption, however, this practice will drastically reduce the service lifetime of the adiabatic pre-cooler media.

ELECTRICAL CONNECTIONS

Check and tighten electrical contacts if required before commissioning the unit. Transport may loosen some of the contacts, posing a risk for overheating or voltage drops. Also during operation, half-yearly checks are recommended.

ROTATION OF FANS

Fans must rotate without obstruction in the direction indicated by arrows on the equipment.

MOTOR VOLTAGE AND CURRENT

Check the voltage and the current of all three legs of the fan motors. The current should not exceed the nameplate rating. After prolonged shutdown the motor insulation should be checked with a Megger insulation tester prior to restarting.
The voltage must not fluctuate more than +/-10% and the imbalance between phases must not be greater than +/-2%.

CAUTION
Do not run/start the fan motor(s) when there is no heat load.

UNUSUAL NOISE AND VIBRATIONS

Unusual noise and/or vibration are the result of malfunctioning of mechanical components or operational problems (e.g. unwanted ice formation). If this occurs, a thorough inspection of the entire unit followed by immediate corrective action is needed. If required, consult your local BAC Balticare representative for assistance.

Inspections and corrective actions

GENERAL CONDITION OF THE EQUIPMENT

Once a year the general condition of the equipment should be inspected.
The inspection should focus on:

- Signs of corrosion
- Accumulation of dirt and debris

Smaller damages of the corrosion protection MUST be repaired as soon as possible to prevent the damage from getting bigger. For Baltibond® hybrid coating use kit (part number RK1057). Larger damages should be reported to the local BAC Balticare representative.

ADIABATIC PRE-COOLING MEDIA

About Adiabatic Pre-Cooling

Airborne debris is caught in the adiabatic pre-cooling media. They act as an air filter and as such protect the heat exchanger coil from rapid and excessive fouling. During adiabatic operation the media is 'rinsed' by water overfeed. The debris, that is rinsed from the media, will drain together with the excess water.
The pre-cooling media can be removed during cold seasons, as soon as it is guaranteed that the ambient temperature will no longer exceed the dry-to-adiabatic switch point. This will extend the service lifetime of the media. It will however increase the speed of fouling of the dry heat exchanger coil.
At least every quarter an inspection of the adiabatic pre-cooler media is recommended, also during mid-season and winter season when usually no adiabatic cycles would be needed.
The inspection should focus on:

- Signs of excessive fouling and scaling of the media
- Full and even wetting of the face area

Float switches

- Check that the float switches can move freely

Fouling

If excessive dirt and debris has accumulated on the pre-cooling media, it is recommended to rinse the media. Refer to "Adiabatic pre-cooling media" on page 24 for the recommended procedure for cleaning and rinsing of the media.

Scaling

Scaling will deposit on the pre-cooling media, every time that the pre-cooling media dries at the end of each adiabatic cycle. The rate of scaling will depend upon:

- The number of adiabatic starts and stops per day
- The water quality
- The water flow over the adiabatic pre-cooler

The expected service lifetime of the pre-cooling media is 5 to 7 years if basic housekeeping practices and these operating and maintenance guidelines are followed.
If excessive scaling is accumulating too fast on the pre-cooling media, the following checks and adjustments need to be made:

- Check and adjust water quality:
  refer to section "About water care" on page 9
- Check and adjust water flow distributed over Adiabatic Pre-Cooler:
  refer to section "About water care" on page 9.

HEAT EXCHANGER COIL

The finned heat exchanger coil is susceptible to corrosion and entrapment of airborne particulates (coil fouling). The speed of coil fouling can be reduced, and the service lifetime of the finned coil can be extended, if the pre-cooling media is kept in place also during cold seasons, to act as air filter.
The heat exchanger coil requires periodic cleaning to maintain the highest operating efficiency possible under the environmental conditions in which the dry unit operates. Regularly scheduled coil cleaning makes a significant contribution to extending equipment lifetime and is an excellent source of energy conservation.
Periodic cleaning of the heat exchanger coil can be accomplished by a vacuum cleaner and/or pressurised air stream. In polluted environments cleaning will require commercially available coil cleaning agents. Cleaning coils by spraying them with water may remove large deposits but do little to remove pollutants. Removing dirt and salts requires a detergent to break the bond between the soil and the surface of the heat exchanger.
However, if water spray is applied, the water pressure must never exceed 2 bar and the water jet must never be applied at an angle to the surface of the fin, but only in parallel to it.

Selecting a coil cleaner is important since the cleaner must neutralise and remove deposits on the surface of the coil. BAC does not recommend the use of alkaline and acidic coil cleaners. These coil cleaners can cause foaming action (oxides or hydroxides of aluminium) resulting in the stripping away of minute layers of the base alloy and the attached soil. Most of these foaming cleaners are harsh and known as reactive cleaning products. One way to recognise this type of cleaner is that normally it will be labelled as corrosive. The base ingredient of a coil cleaner should not be so harsh that it attacks the metal, coil coating or the personnel applying the cleaner. An important concern when applying coil cleaners is rinse-ability. Most hydroxides tend to cling the surface unless sufficient wetting agents have been added to the formula to reduce surface tension of the solution. If the solution does not have enough wetting agents and is not rinsed thoroughly from the surface, the residual material can settle at the fin/tube interface and continue to attack the fin.
BAC recommends the use of the more sophisticated cleaners, known as a "surfactant system". They reduce surface tension, penetrate, emulsify, and dissolve the soils without the base alloy. Surfactant systems are safe for the coil alloy, they are free rinsing, they lift and remove deposits better than alkaline cleaners, and they are environmentally safe, as well as safe and easy to apply and rinse. Surfactant systems are almost always non-corrosive.

Fan replacement

In case of replacement, any safety hazards stemming from the fan must be re-evaluated once it is installed on the cooler.
Observe the following when working on the fans:

- Do not make any modifications, additions or conversions to the fan without the approval of the cooler manufacturer.
- Terminals and connections may have residual voltage after unit shutdown.
  Wait five minutes after disconnecting the voltage at all poles before opening the fan.
- In the event of failure, there is electric voltage at the rotor and impeller.
  Do not touch the rotor and impeller once they are installed.
- Shut down the fan immediately if you detect a missing or ineffective protective feature.

The fans are controlled via a digital bus system (MODBUS RTU).
For the bus communication each fan needs to be assigned a unique address, starting with "2, 3, 4…….", leaving 1 free for any replacement fan. The sequence of the above system is shown on the diagram below.
In case of a fan replacement it will be necessary to specify the assigned fan number shown on the diagrams, so that the replacement fan will be programmed accordingly.

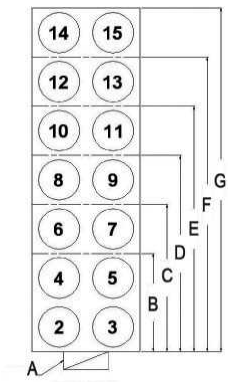

A. Control Panel
B. 4 Fan Unit
C. 6 Fan Unit
D. 8 Fan Unit
E. 10 Fan Unit
F. 12 Fan Unit
G. 14 Fan Unit

Diagram showing sequence of fan motor address

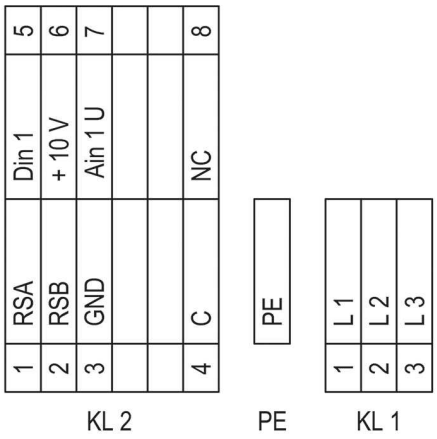

Schematic of internal motor terminal strip

No.	Conn.	Designation	Function / assignment
KL 1	1	L1	Mains supply connection, supply voltage 3~380÷480 VAC; 50/60 Hz
KL 1	2	L2	Mains supply connection, supply voltage 3~380÷480 VAC; 50/60 Hz
KL 1	3	L3	Mains supply connection, supply voltage 3~380÷480 VAC; 50/60 Hz
PE		PE	Earth connection, PE connection
KL 2	1	RSA	Bus connection RS-485, RSA, MODBUS RTU; SELV
KL 2	2	RSB	Bus connection RS-485, RSB, MODBUS RTU; SELV
KL 2	3	GND	Signal ground for control interface, SELV
Kl 2	4	C	Status relay; floating status contact; changeover contact; common connection; contact rating 250 VAC / 2 A (AC1)
KL 2	5	Din1	Digital input 1 enabling of electronics Enabling: open pin or applied voltage 5-50 VDC Disabling: bridge to GND or applied voltage < 1 VDC Reset function: triggers software reset after a level change to <1 V; SELV
KL 2	6	+ 10 V	Fixed voltage output 10 VDC, +10V ±3%, max. 10 mA, short circuit-proof, power supply for external devices (e.g. potentiometer), SELV
KL 2	7	Ain U	Analogue input 1 (set value) 0-10 V, Ri=100 kΩ, parametrizable curve, only usable as alternative to input Ain1 SELV
KL 2	8	NC	Status relay, floating status contact, break for failure

Legend for internal motor terminal strip

Cleaning procedures

CAUTION

Stainless steel parts can be sharp.

Avoid risk for cutting injury by wearing the proper protective equipment !

WATER DISTRIBUTION OF ONCE-THROUGH PRE-COOLERS

The recommended procedure for cleaning of the water distribution header is:

1. Open the hinged pre-cooling media cover (the 1st time, remove the tappers that secure the cover during transport first)

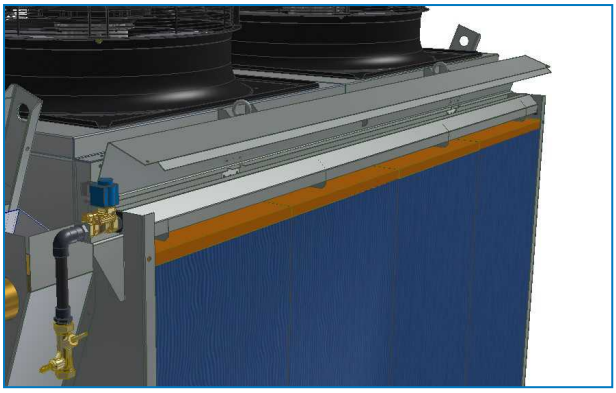

The cover can be secured in the open position by means of a hook that is positioned in the middle.

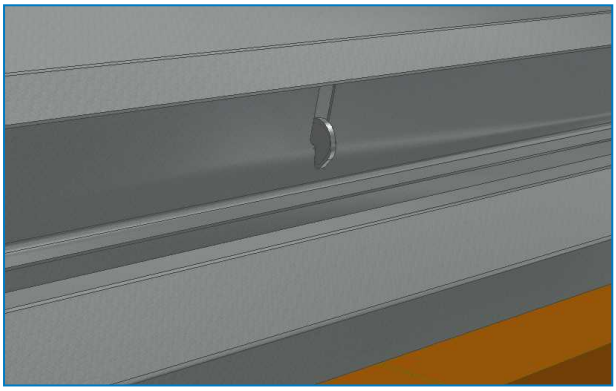

2. Lift the water deflection plates and remove them.

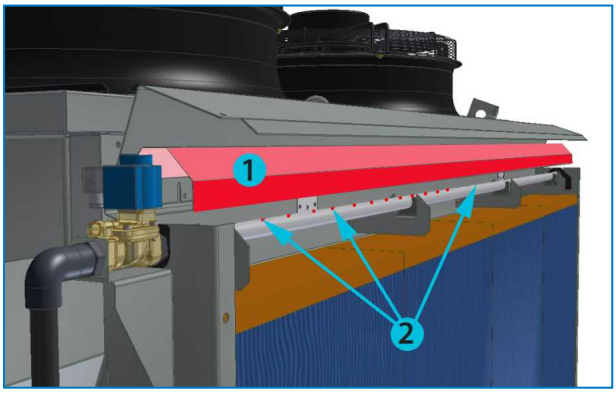

1. Water deflection plates
2. Water holes

3. Activate the pre-cooler water from the digital controller's maintenance menu to verify if any holes are clogged and need cleaning. If water is spraying out of the tube (+/- 10 cm high) at regular intervals, all holes are free. This applies to both drain holes at the extremities of the distribution pipe as well.

4. Unscrew the cap at the end of the tube to flush any debris that might be caught in the water distribution pipe.

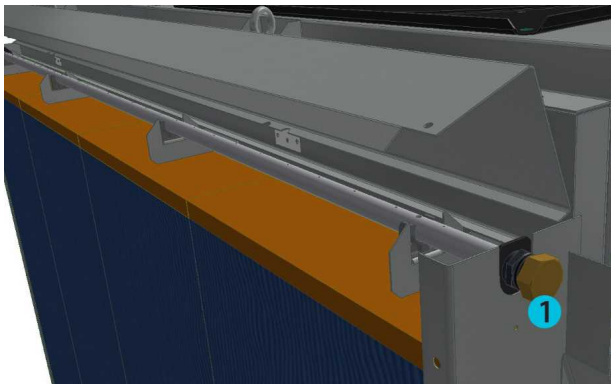

1. Cap on water distribution tube

5. After the tube is flushed, stop the flow of water by exiting the maintenance menu. Put everything back in place in the reverse order. Close the cover by gently lifting the securing hook.

When reinstalling the water deflection plates, make sure to slide the rubbers to the side in order to provide a proper seal as indicated in the following picture.

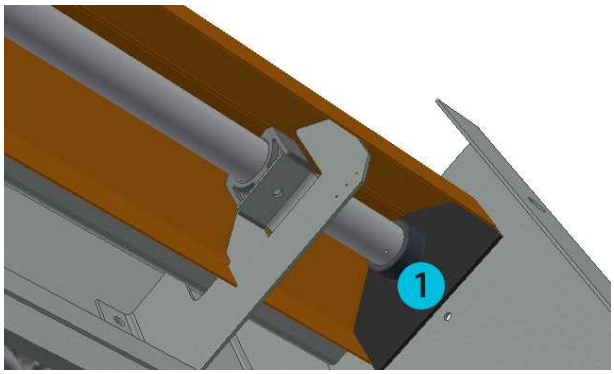

1. Side rubbers on the water distribution tube

WATER DISTRIBUTION OF PRE-COOLERS EQUIPPED WITH RECIRCULATION PUMP

The strainer at the pump is sized to keep debris out of the water distribution gutter. However, some dirt could accumulate overtime. As a result the water distribution gutter at the top should be cleaned twice a year as a preventive measure.
The recommended procedure for cleaning of the water distribution header is:

1. Open the hinged pre-cooling media cover (the 1st time, remove the tappers which secure the cover during transport first)

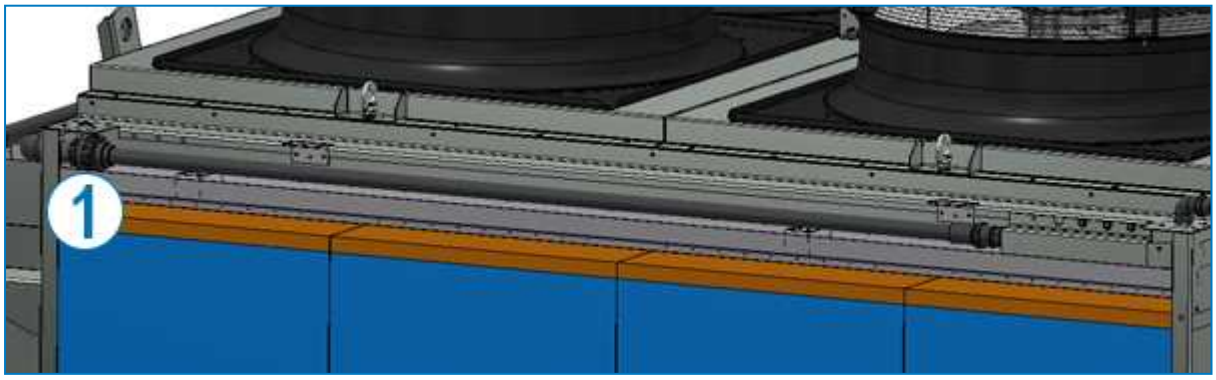

1. Three-part coupling

2. Clean the piping in case of blockages by disconnecting the threaded end cap.

1. Threaded end cap

In case there are still some blockages that will not flow out, you can loose the whole pipe by disconnecting the three-part coupling.

3. Use a clean piece of cloth to remove any dirt or debris from the gutter.

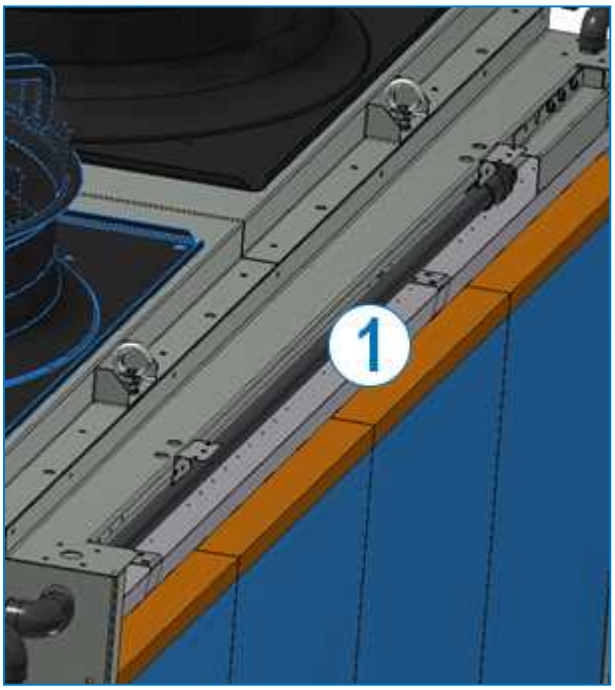

1. Distribution gutter

4. After the gutter is cleaned, put everything back in place in the reverse order and close the cover.

STRAINER AND PUMP OF PRE-COOLERS EQUIPPED WITH RECIRCULATION PUMP

Both the pump and strainer can be cleaned during adiabatic operation. Before performing any maintenance on the pumps, cut the power to the pumps in the electrical panel first. Adiabatic operation can be ensured through the controller's maintenance menu.

1. Loosen the knobs and remove the inspection panel (in case of two pumps, the unit is equipped with two panels).

2. Lift the pump out of the strainer and remove it through the inspection panel.

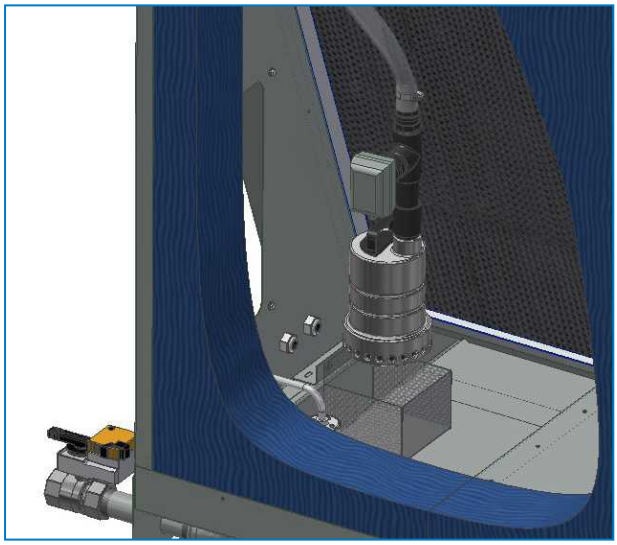

3. Remove the bolts securing the strainer in the sump to remove this as well in order to clean it outside of the unit.
4. Reinstall in the reverse order.

Adiabatic pre-cooling media

CLEANING

The digital controller provides automatic periodic cleaning of the pre-cooling media.
If the media need additional manual cleaning, a cleaning cycle can be forced through the controller.

REMOVAL AND REPLACEMENT

The expected service lifetime of the pre-cooling media is 5 to 7 years if basic housekeeping practices and these operating and maintenance guidelines are followed. If severe disposition causes reduced humidification efficiency and reduced airflow, it is recommended that the pre-cooling media is replaced. New adiabatic pre-cooling media are available from your local BAC-Balticare representative.
Media removal/replacement procedure:

1. Verify that the pre-cooling media are DRY! Removing a wet pad will create debris falling into the unit.
2. Remove top plate.
3. Remove pre-cooling media.

Start in the middle first and work your way to the sides.
Re-install in reverse. Make sure the pre-cooling media is properly pressed down on the supports in the water collection gutter beneath.

CAUTION

The pre-cooling media have a front side and a back side and need to be (re)installed in the correct position to ensure full wetting over the depth of the media and to ensure maximum efficiency. The blue coloured side needs to be at the outside.

WATER COLLECTION GUTTERS BENEATH THE PRE-COOLING MEDIA

The water that is passed over the pre-cooling media and did not evaporate is collected through a gutter that guides this water either to a drain (in case of a once through pre-cooler) or to a sump (in case of a pre-cooler with recirculation).
Once a year it needs to be verified that the gutter is free of debris and that the water outlet connections are free of obstructions. This can be done by removing the pre-cooling media as described here above.
When reinstalling the pre-cooling media support, make sure the arrow points toward the water outlet connection as indicated in the pictures below:

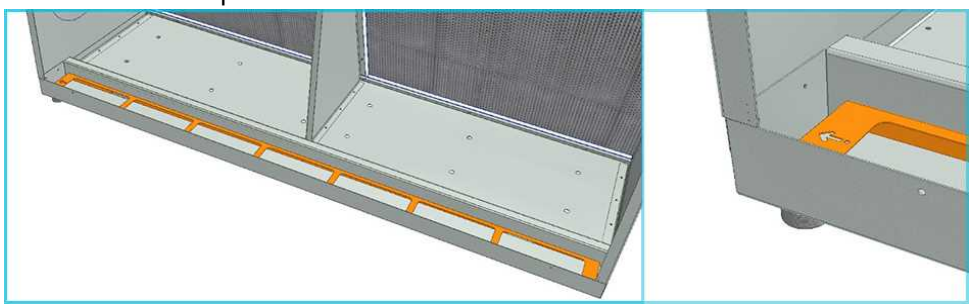

7 TVC COMPREHENSIVE MAINTENANCE

About comprehensive maintenance

In order to ensure maximum efficiency and minimum downtime of your evaporative cooling system, it is recommended to establish and execute a programme of preventive maintenance.
Your local BAC Balticare representative will assist you in establishing and implementing such programme. The preventive maintenance programme must not only avoid that excessive downtime occurs under unforeseen and unwanted conditions, it also ensures that factory authorized replacement parts are used, which are designed to fit and for their purpose carry the full factory warranty. To order factory authorized parts, contact your local BAC Balticare representative. Make sure you include the unit serial number when ordering any parts.

Prolonged outdoor stay

Should the unit(s) be stored outside prior to installation and/or start-up for approximately one month (shelf life) or longer, or stored in severe climates, it is imperative that certain actions be performed by the installing contractor in order to maintain the unit in "as shipped" condition. These actions include but are not limited to:

- Rotate the fan(s) once per month, at least 10 revolutions.
- Rotate the motor shaft of all motors installed on the unit(s) once per month, at least 10 revolutions. This includes the pump motor.
- Add desiccants to control panel interiors.
- Wrap motor in non-plastic protective material.
- Keep drains open on the cold water basins.
- Ensure unit(s) is stored on level ground surface.
- Coils must be empty and closed-off.
- Avoid cold temperatures.
- Avoid condensation.
- Check battery of Controller.

For complete instructions, please contact your local BAC Balticare Representative.

8 TVC FURTHER ASSISTANCE & INFORMATION

Assistance

BAC has established a specialized total care company called Balticare. The BAC Balticare offering involves all elements required to ensure a safe and efficient operation of your evaporative cooling products.
For more details, contact your local BAC representative for further information and specific assistance at www.BaltimoreAircoil.eu

More information

REFERENCE LITERATURE

- Eurovent 9-5 (6) Recommended Code of Practice to keep your Cooling System efficient and safe. Eurovent/Cecomaf, 2002, 30p.
- Guide des Bonnes Pratiques, Legionella et Tours Aéroréfrigérantes. Ministères de l'Emploi et de la Solidarité, Ministère de l'Economie des Finances et de l'Industrie, Ministère de l'Environnement, Juin 2001, 54p.
- Voorkom Legionellose. Minsterie van de Vlaamse Gemeenschap. December 2002, 77p.
- Legionnaires' Disease. The Control of Legionella Bacteria in Water Systems. Health & Safety Commission. 2000, 62p.
- Hygienische Anforderungen an raumlufttechnische Anlagen. VDI 6022.

INTERESTING WEBSITES

- www.BaltimoreAircoil.eu
- www.eurovent-certification.com
- www.ewgli.org
- www.ashrae.org
- www.uniclima.org
- www.aicvf.org
- www.hse.gov.uk

ORIGINAL DOCUMENTATION

This manual is originally made in English. Translations are provided for your convenience. In the event of discrepancies, the English original text shall prevail over the translation.

COOLING TOWERS

CLOSED CIRCUIT COOLING TOWERS

ICE THERMAL STORAGE

EVAPORATIVE CONDENSERS

HYBRID PRODUCTS

PARTS, EQUIPMENTS & SERVICES

BLUE by nature
GREEN at heart

www.BaltimoreAircoil.eu

info@BaltimoreAircoil.eu

Please refer to our website for local contact details.

Industriepark - Zone A, B-2220 Heist-op-den-Berg, Belgium

© Baltimore Aircoil International nv